CLEAN WATER

WATER POLLUTION CONTROL RESEARCH SERIES • 11022 DMU 08/70

33

Combined Sewer Regulation and Management

A Manual of Practice

DEPARTMENT OF THE INTERIOR • FEDERAL WATER QUALITY ADMINISTRATION

WATER POLLUTION CONTROL RESEARCH SERIES

The Water Pollution Control Research Reports describe the results and progress in the control and abatement of pollution of our Nation's Waters. They provide a central source of information on the research, development and demonstration activities of the Federal Water Quality Administration, Department of the Interior, through in-house research and grants and contracts with the Federal, State, and local agencies, research institutions, and industrial organizations.

Triplicate tear-out abstract cards are placed inside the back cover to facilitate information retrieval. Space is provided on the card for the user's accession number and for additional key words. The abstracts utilize the WRSIC system.

Water Pollution Control Research Reports will be distributed to requesters as supplies permit. Requests should be sent to the Project Reports System, Office of Research and Development, Department of the Interior, Federal Water Quality Administration, Washington, D. C. 20242.

Previously issued reports on the Storm & Combined Sewer Pollution Control Program:

11020	–	12/67	Problems of Combined Sewer Facilities and Overflows, 1967. (WP-20-11)
11030	DNS	01/69	Water Pollution Aspects of Urban Runoff. (WP-20-15)
11020	EXV	07/69	Strainer/Filter Treatment of Combined Sewer Overflows. (WP-20-16)
11020	FKI	01/70	Dissolved Air Flotation Treatment of Combined Sewer Overflows. (WP-20-17)
11020	DIH	06/69	Improved Sealants for Infiltration Control. (WP-20-18)
11020	DES	06/69	Selected Urban Storm Water Runoff Abstracts. (WP-20-21)
11020	DIG	08/69	Polymers for Sewer Flow Control. (WP-20-22)
11020	EKO	10/69	Combined Sewer Separation Using Pressure Sewers. (ORD-4)
11020	–	10/69	Crazed Resin Filtration of Combined Sewer Overflows. (DAST-4)
11023	FDD	03/70	Rotary Vibratory Fine Screening of Combined Sewer Overflows. (DAST-5)
11020	–	06/69	Sewer Infiltration Reduction by Zone Pumping. (DAST-9)
11020	DGZ	10/69	Design of a Combined Sewer Fluidic Regulator. (DAST-13)
11023	DPI	08/69	Rapid-Flow Filter for Sewer Overflows.
11020	–	03/70	Combined Sewer Overflow Seminar Papers.
11020	DWF	12/69	Control of Pollution by Underwater Storage.
11024	–	06/70	Combined Sewer Overflow Abatement Technology.
11034	FKL	07/70	Storm Water Pollution.
11024	FKN	11/69	Storm Pollution & Abatement from Combined Sewer Overflows–Bucyrus, Ohio. (DAST-32)
11024	DMS	05/70	Engineering Investigation of Sewer Overflow Problem–Roanoke, Virginia.
11000	–	01/70	Storm & Combined Sewer Demonstration Projects–January 1970.

COMBINED SEWER REGULATION AND MANAGEMENT

A MANUAL OF PRACTICE

by the

American Public Works Association

for the

FEDERAL WATER QUALITY ADMINISTRATION

DEPARTMENT OF THE INTERIOR

and

TWENTY-FIVE LOCAL GOVERNMENTAL JURISDICTIONS

Program No. 11022 DMU

Contract 14-12-456

July 1970

For sale by the Superintendent of Documents, U. S. Government Printing Office
Washington, D.C., 20402 - Price $1.50

SPONSORING LOCAL AGENCIES

City of Akron, Ohio
City of Alexandria, Virginia
City of Atlanta, Georgia
City of Boston, Massachusetts
Metropolitan District Commission, Boston, Massachusetts
City of Charlottetown, PEI, Canada
Metropolitan Sanitary District of Greater Chicago, Illinois
City of Cleveland, Ohio
City of Eugene, Oregon
City of Fort Wayne, Indiana
City of Kansas City, Missouri
City of Middletown, Ohio
City of Montreal, Quebec, Canada
City of Muncie, Indiana
Metropolitan Government of Nashville and Davidson County, Tennessee
City of Omaha, Nebraska
City of Owensboro, Kentucky
Allegheny County Sanitary Authority, Pittsburgh, Pennsylvania
City of Richmond, Virginia
Metropolitan St. Louis Sewer District, Missouri
City of St. Paul, Minnesota
Municipality of Metropolitan Seattle, Washington
City of Syracuse, New York
City of Toronto, Ontario, Canada
Washington, District of Columbia

FWQA Review Notice

This report has been reviewed by the Federal Water Quality Administration and approved for publication. Approval does not signify that the contents necessarily reflect the views and policies of the Federal Water Quality Administration.

ABSTRACT

Design application, operation and maintenance of combined sewer overflow regulator facilities are detailed in this Manual of Practice, developed in conjunction with a report prepared on combined sewer overflow regulators.

Design calculations are given for various types of regulators and tide gates. A sample regulator facility control program is given to illustrate the development of a control system. Operation and maintenance guidelines are also given. Thirty-eight sketches and photographs are included.

This manual and accompanying report were submitted in fulfillment of Contract 14-12-456 between the Federal Water Quality Administration, twenty-five local jurisdictions and the American Public Works Research Foundation.

APWA RESEARCH FOUNDATION
Project 68-1b

STEERING COMMITTEE

Peter F. Mattei, Chairman

Arthur D. Caster	Walter A. Hurtley
William Dobbins	Ed Susong
George T. Gray	Harvey Wilke
Carmen Guarino	

Richard H. Sullivan, Project Director
J. Peter Coombes, Principal Investigator

SPECIAL CONSULTANTS

James J. Anderson
Dr. Morris M. Cohn
Morris H. Klegerman
Ray E. Lawrence
M. D. R. Riddell

APWA Staff*

R. D. Bugher	Violet Perlman
R. H. Ball	Katherine Manolis
Leo Weaver	Ellen M. Pillar
Lois V. Borton	Maxine Coop
Marilyn L. Boyd	Mary J. Webb
Kathryn D. Priestley	Sheila J. Chasseur
Patricia Twist	Oleta Ward

*Personnel utilized on a full-time or part-time basis on this project

CONTENTS

ABSTRACT i

In Explanation: The Purpose of a Manual of Practice on Combined Sewer Regulation and Management xi

SECTION 1
Types of Regulators; Basic Principles; Applicability; Guidelines on Selection 1

SECTION 2
Design Guidelines for Regulators, Their Chambers and Control Facilities 19

SECTION 3
Design Guidelines for Tide Gates, Their Chambers and Control Facilities 79

SECTION 4
Instrumentation and Control of Regulator Facilities 93

SECTION 5
Practices for Improved Operation and Maintenance of Regulators and Their Appurtenances 107

SECTION 6
Design and Layout, as Influenced by Operation and Maintenance – Typical Criteria and Details 113

SECTION 7
Example of Systems Control Through Instrumentation 121

SECTION 8
Acknowledgements 133

FIGURES

		Page
1.12.2.1	Diagram of Fluidic Regulator	8
1.12.2.2	Vortex Element	9
1.12.2.3	Schematic Arrangement—Fluidic Interceptor Sewer Flow Control—Single Sensor	10
1.12.3	Vortex Regulators	11
1.12.4	Spiral Flow (Helical) Regulator	13
1.12.5	Possible Application, Stilling Pond Regulator	14
1.12.6	Possible Application High Side-Spill Weir	15
1.12.7	Artist's Conception Inflatable Fabric Dam	17
2.1.1	Typical Layout, Manually Operated Gate	22
2.1.3.1	Hydraulic Profile, Manually Operated Gate (2 cfs)	25
2.1.3.2	Flow Through 12-Inch-Wide Orifice	26
2.1.3.3	Hydraulic Profile Manually Operated Gate (3.3 cfs)	28
2.3.3.1	Hydraulic Profile Horizontal Orifice Regulator (2 cfs)	32
2.3.3.2	Hydraulic Profile Horizontal Orifice Regulator (4.3 cfs)	34
2.5.1.1	Side-Overflow Weir for Small Overflow	36
2.5.2	Acker's Method Factor for Side-Spill Weir Design	39
2.6.1	Internal Self-Priming Siphon	40
2.7.1	Typical Layout Float-Operated Gate	42
2.7.3	Hydraulic Profiles Float-Operated Gate	45
2.8.1.1	Typical Layout Tipping Gate Regulator	52
2.8.1.2	Tipping Gate Used at Milwaukee	53
2.8.1.3	Tipping Gate Used by Allegheny County Sanitary Authority	54
2.8.2	Calibration of 12-inch Control Gate	55
2.8.3	Activation of Free Floating 12-Inch Tipping Gate	56
2.8.4.1	Hydraulic Conditions for Tipping Gates	58
2.8.4.2	Hydraulic Profile for 2-cfs Tipping Gate Regulator	59
2.8.4.3	Hydraulic Profile for 2.45-cfs Tipping Gate Regulator	61
2.9.1	Applications of Cylindrical Gates	63
2.10.1.1	Cylinder-Operated Gate	65
2.10.1.2	Cylinder-Operated Gate (Water Actuated)	66
2.10.1.3	Cylinder-Operated Gate (Oil Actuated)	67

2.10.4 Hydraulic Profile for Regulator With Cylinder-Operated Gate 69
2.12.1 Ponsar Siphon 74
3.1.3.1 Cast Iron Circular Flap Gates 82
3.1.3.2 Square and Rectangular Cast Iron Flap Gates 83
3.1.3.3 Circular Pontoon Flap Gates 84
3.1.3.4 Square and Rectangular Pontoon Flap Gates 85
3.1.3.5 Square and Rectangular Timber Flap Gates 86
3.2.1 Plan and Profile of Tide Gate Chamber 89
3.2.2 Flap Gates Head Loss Coefficients 90
6.1.3 Access Stairs 116

TABLES

6.1.6 Sluice Gate Sizes 118

6.2 Sluice Gate Materials 119

IN EXPLANATION: THE PURPOSE OF A MANUAL OF PRACTICE ON COMBINED SEWER REGULATION AND MANAGEMENT

The American Public Works Association has completed a research study covering a national in-depth investigation of combined sewer practices of representative local jurisdictions. The study covered the design, choice and application of regulator devices, use of tide or backwater gate facilities, performance of regulator-overflow installations, and operation and maintenance methods. Efforts were made to obtain reliable information on the cost of construction, equipment, and maintenance of regulators and their appurtenant facilities. The report of this investigation covers the methods utilized in the survey, an evaluation of the research data, an enumeration of the findings and a list of recommendations. The recommendations when adopted should result in better engineering technologies and the utilization of more sophisticated methods and mechanisms in future regulator practice.

The investigation disclosed the inadequacies of many of the present regulator-overflow devices, and methods of their operation. Wet-weather overflows were, as expected, common to all installations; however, these overflows were more frequent and more extended in duration than necessary to protect upstream collector sewers, and downstream interceptors and treatment works. Even instances of dry-weather overflows were reported. Little or no attempt has been made to improve the quality of overflow waste waters by the use of supplementary protective devices.

The major deficiencies, unreliability and inadequacy of regulator-overflow installations, in the main, were the result of failure to apply recognized engineering and construction methods. These malpractices included such matters as: Lack of overall planning of combined sewer systems and of recognition that overflow regulation is a total systems problem; the use of an excessive number of overflow points to protect local sewer systems from surcharging and backflooding, without considering the impact of any single regulator-overflow station on a total system network and on the pollution of receiving waters; inexact design criteria for such facilities; inappropriate choice and application of particular types of regulators to the specific control functions; and ineffective operation and maintenance procedures.

It is apparent that many of these positive factors resulted from cut-and-try design, and operation techniques utilized during the years when combined sewer flows were discharged to receiving waters without treatment. The advent of sewage treatment, coupled with higher standards of pollution control of receiving waters, now make it mandatory to utilize improved practices in combined sewer regulation.

These improvements in regulator technologies are of practical importance. The engineering profession and government officials must face the responsibility of providing for the control of combined sewer overflows at the lowest possible cost commensurate with dependable performance and the reduction in pollution discharged to receiving waters.

These purposes can be enhanced by establishing construction, equipment, and maintenance criteria, which will serve as functional guidelines for designers of combined sewer systems; owners of such sewer facilities; manufacturers who provide the equipment for regulator and sewer system management procedures; and operation and maintenance personnel who must get the best possible service from the best possible facilities.

It is the purpose of this Manual of Practice on Combined Sewer Regulation and Management to present guidelines for:

1. Applicability of types of regulators to meet specific control needs (Section 1)
2. The design and layout of regulator structures and regulator devices and controls (Section 2)
3. Design of tide or backwater gate devices and structures (Section 3)
4. The application of instrumentation and control facilities for the purpose of achieving maximum performance from each individual regulator station and of the integration of all regulator stations into a total controlled systems management program (Section 4)
5. Improved operation and maintenance practices (Section 5).

This Manual of Practice is not intended to be a "cookbook." It offers guidance to the design engineering profession; to manufacturers and suppliers of products and processes of primary and secondary significance to the regulator fields; and to governmental agencies and officials who are responsible for the administration and operation of combined sewer systems. The Manual is not a substitute for knowledge and experience. It is a tool for the use of properly trained and experienced professionals.

SECTION 1

TYPES OF REGULATORS; BASIC PRINCIPLES; APPLICABILITY; GUIDELINES ON SELECTION

CONTENTS

Page

STATIC REGULATORS

1.1 Manually Operated Gates 3
1.2 Fixed Orifices (Vertical) 3
1.2 *Fixed Orifices (Horizontal) – the drop inlet* 3
1.4 Leaping Weirs 4
1.5 Side-Spill Weirs 4
1.6 Internal Self-Priming Siphons 4

DYNAMIC REGULATORS – SEMI-AUTOMATIC

1.7 Float Operated Gates 5
1.8 Tipping Gates 5
1.8 Cylindrical Gates 5

DYNAMIC REGULATORS – AUTOMATIC

1.10 Motor-Operated Gates 6
1.11 Cylinder-Operated Gates 6
1.12 Current Developments – New Devices 6

STATIC REGULATORS

1.1 Manually Operated Gates

1.1.1 Basic Principle

The chief element of this regulator is a manually operated vertical gate mounted on a vertical orifice, through which passes the intercepted sewage which is diverted to the treatment plant. Low flows pass through the gage, a channel with either subcritical or critical depth. At higher flows the regulator may act as a simple vertical orifice with free discharge or as a submerged orifice.

The regulator structure consists of an overflow dam constructed across the channel of the combined sewer which diverts dry-weather flow through the gate into an orifice chamber. From this chamber the flow is conveyed by a branch interceptor to the main interceptor. In wet weather, excess flows discharge over the dam to the receiving waters.

1.1.2 Application

This device may be used for diverting wet-weather flows of less than 4 cfs. since dynamic regulators rarely are justified economically for such small flows. Manually operated gates are considered more effective as regulators than other types of static devices. The gate opening is adjustable so that the quantity diverted to the interceptor may be varied. Operation and maintenance costs, as well as construction costs, are less for this type than for automatic regulators. It is most applicable where further regulation of the diverted flow will occur downstream, either at another regulator or at the treatment plant.

For flows of less than 4 cfs the choice of regulator would appear to be between the manually operated gate and the tipping gate described in 1.8. However, the latter device diverts a lower ratio of wet-weather to dry-weather flow.

1.2 Fixed Orifices—Vertical

1.2.1 Basic Principle

The main element is a fixed vertical opening in the combined sewer through which the diverted flow passes. The principle is as described for the manually operated gate.

1.2.2 Application

This device is generally used for wet-weather flows of less than 2 cfs. It is specifically applicable where additional regulation of the diverted flow will occur further downstream, either at another regulator or at the treatment plant. When not regulated downstream, the intercepted flow during a storm may exceed design quantity. When used for small flows, such excess interception may not be serious in a large sewer system where only a small percentage of the total flow is diverted to the plant.

The use of a manually operated gate is preferred over a fixed orifice, although the gate represents an additional capital cost.

While provision can be made in design for varying the size of the fixed orifice by the use of removable plates, the changing of such plates may be difficult after the regulator has been in service for some time. The fixed orifice does not require lubrication as does the manually operated gate.

1.3 Fixed Orifices—Horizontal (The Drop Inlet)

1.3.1 Basic Principle

The device consists of a horizontal opening constructed either in the bottom of the combined sewer or the bottom of a separate chamber of the combined sewer. In the former case it is usually covered with a grate. When constructed in a separate chamber a diversion dam must be constructed in the combined sewer to divert the dry-weather flow through a vertical opening into the orifice chamber. It is also preferable to use such a dam when the orifice is placed in the combined sewer. In this way the opening acts as a horizontal orifice under all conditions of flow. The flow not diverted into the interceptor through the orifice passes over the dam to the receiving waters.

1.3.2 Application

This device is generally used for diverting wet-weather flows of less than 2 cfs. Present practice is to replace this type with more effective regulators.

During dry-weather periods, in spite of daily maintenance, clogging of the grates frequently causes excessive overflow to the receiving waters. During storm periods, clogging of the grates, or "jumping across" the orifice, causes a large portion of the total flow to discharge to overflow.

Maintenance is difficult as it is impossible to shut off all flow to the interceptor unless the horizontal orifice is placed in a separate chamber. When a separate chamber is used, a vertical orifice will result in less variation in intercepted flows during storm periods than is the case in a horizontal orifice.

The only advantages of this type of regulator are its low initial capital cost and that, at most, only one structure is required.

The horizontal orifice does not regulate combined sewer flows effectively and is expensive to maintain.

1.4 Leaping Weirs

1.4.1 Basic Principle

This regulator consists of an invert opening in the combined sewer dimensioned to permit the dry-weather flow to fall through the opening and to be conveyed through a branch interceptor to the main interceptor and treatment plant. During wet-weather periods the increase in velocity and depth in the combined sewer causes all or most of the flow to pass over or leap over the opening and continue on to receiving waters.

1.4.2 Application

Leaping weirs generally have been used for intercepting low volume flows. While used to a considerable extent in the past, recent practice is to replace existing leaping weirs with other types of regulators.

The disadvantages of this regulator are:

1. It cannot be used when a tide gate is required since the backwater effect will prevent the leaping action and the device will act as a horizontal orifice.
2. During storm periods all the flow may leap over the opening and part of the flow will not be diverted to the treatment plant.
3. It is difficult, if not impossible to temporarily shut off all flow to the interceptor and treatment plant.
4. The opening may become clogged or bridged with floating material, causing spillage of dry-weather flow into the receiving waters.

Its main advantage is that only one structure is required, which may be desirable where space is limited or where economy is essential. The leaping weir is not considered an effective regulator.

1.5 Side-Spill Weirs

1.5.1 Basic Principle

The side-spill weir is constructed parallel to, or at a slight angle to the axis of the combined sewer, with the crest set at an elevation above the peak dry-weather flow line. During wet-weather periods flows in excess of the peak dry-weather flow will discharge over the weir into the outfall sewer. The excess flow may be further regulated downstream or may discharge directly into the receiving waters.

1.5.2 Application

Theoretically, the side-spill weir may be used for the overflow of any quantity of excess wet-weather flow. However, since the length of the weir is proportional to the quantity of overflow, the structure becomes larger and more costly as the volume of overflow increases. Side-spill weirs are frequently used for low flows, and where the overflows are regulated further downstream.

The major advantage of this type of regulator is that maintenance costs are generally lower than for other types. The major disadvantage is that the regulator cannot be adjusted after construction except by reconstruction of the weir or by manual adjustment of the weir crest.

When close regulation of the flow to the plant is desired it is preferable to use other types of regulators, the design of which is based on accepted hydraulic principles. Little or no field data have been published regarding the operation of these weirs that conform with the theoretical values for larger flows. Where such regulation farther downstream does not take place the intercepted flow in times of storm may exceed interceptor design capacity. This should be checked in design to insure that such excess interception does not result in unnecessary spills at outfall locations downstream or cause surcharging at the treatment plant.

1.6 Internal Self-Priming Siphons

1.6.1 Basic Principle

A siphon may be defined as a closed conduit which lifts a liquid to an elevation higher than its free surface and discharges it at a lower elevation. When a closed conduit rises above the hydraulic grade line, negative pressure (i.e., pressures less than atmospheric pressure) develops at the summit which is equal to the vertical distance between the hydraulic grade line and the center line of flow at the summit. To initiate operation the siphon must be primed, i.e., sufficient negative pressure must be developed at the summit to raise the water in the uptake branch of the siphon until flow is established. Priming is effected by removal of air from the summit either by mechanical means, such as a vacuum pump, or by use of the hydraulic energy inherent in the differential in elevation between the upper and lower water surfaces of the intake and discharge levels of the siphon. This difference in levels is the operating power which must overcome all energy losses within the siphon, including friction, entry, bends, and discharge; it generates the required velocity to maintain the design flow rate. Under maximum vacuum conditions in a siphon, a water column could rise to a theoretical height of approximately 34 feet at mean sea level. Practically, a water column height of only 75 percent of the theoretical maximum can be obtained.

1.6.2 Application

The internal self-priming siphon may be used to divert excess storm flows to receiving waters and not to the interceptor as the normal regulator practice dictates. Such flows should exceed about 5 cfs so that

the throat section will be large enough to prevent clogging. It may be used to replace an overflow weir in any regulator, provided there is an adequate difference in water levels above and below the siphon to allow it to function as designed. In some cases the siphon may be more economical than a weir due to the smaller structure required. This type siphon also can be used to control the water levels in a conduit leading to a treatment plant or pumping station in order to prevent excessive flows to these installations. The siphon will maintain the water levels within a narrow range by discharging excess flows to receiving waters. For this purpose it may be desirable to use two or three siphons, with each succeeding one set to operate at a slightly higher water level.

DYNAMIC REGULATORS–SEMI-AUTOMATIC

1.7 Float-Operated Gates

1.7.1 Basic Principle

This type regulator consists of a regulating gate, a float, and an interconnecting device arranged so that variations in the water level either in the combined sewer or interceptor will move the float and actuate the gate. Operation of the gate does not require either hydraulic pressure or electric power. A typical layout is shown in Figure 2.7.1.

The regulator consists of an overflow dam or weir constructed across the channel of the combined sewer to divert dry-weather flow through the regulating gate into the regulator chamber and thence into the branch interceptor. The branch interceptor discharges the diverted flow into an interceptor which conveys the flow to the treatment plant. In wet weather excess flows discharge over the dam and continue through the storm sewer to the receiving waters.

1.7.2 Application

Theoretically, this type device can be used for diversion of any volume. Generally, however, its use will not be economically justified for diverting flows of less than 4 cfs. Its major advantage is that no outside source of energy is required for operation. Regulation is controlled by movements of the float. In the larger sizes, the float diameter may be as much as 5 feet. This requires a large size floatwell which may trap grit that creates a maintenance problem. Accumulation of floating material on the float may cause malfunctioning of the system. Since the entire system is in fine balance, proper operation requires at least biweekly maintenance.

1.8 Tipping Gate

1.8.1 Basic Principle

This regulator consists of a rectangular metal plate mounted on a horizontal pivot located below the center of gravity of the plate. The plate is mounted in a casting in such a manner that the flow diverted to interceptor must pass under it. During dry-weather flows the pressure on the upstream side of the gate is below the pivot and the gate rests in the open position permitting all flow to pass into the interceptor. During periods of storm flow the water level in the combined sewer rises and the resultant pressure on the upstream side of the gate above the pivot causes the gate to partially close, thus reducing the orifice area and limiting the quantity of flow to the interceptor. The remainder of the storm flow discharges over a diversion dam into the outfall sewer and into the receiving waters.

1.8.2 Application

Tipping gates can be used to divert a wide range of flow volumes. These gates will intercept less flow in wet-weather periods than the fixed orifice or manually operated gate due to the partial closing or "tipping" of the gate by the upstream water pressure. The device can be adjusted in the field to revise either the maximum or the minimum opening, thus altering the flow to be intercepted. The discharge through a 12-inch gate under a head of one foot will vary from about 1 to 6 cfs depending on the opening height. The head required to close the gate will vary from 0.3 to 1.5 feet, depending upon the downstream water level.

1.9 Cylindrical Gates

1.9.1 Basic Principle

This device consists of a horizontal circular orifice located in a chamber adjacent to the combined sewer. The regulator is a cylindrical gate balanced by a counterweight and hung from an articulated frame directly over the orifice.

The rising of the water surface, either in the collector or in the interceptor, controls directly the closing of the orifice by the cylinder without the use of floats and transmissions.

1.9.2 Application

This new type regulator has been used in only one city for sewage diversion. Operation and maintenance problems are still being worked out. Further performance records are needed for accurate evaluation. This gate is hydraulically activated by sewage flow and, hence, no outside source of energy is required. According to the manufacturer this device is suitable for diverted flows of from less than 10 cfs to 200 cfs.

1.10 Motor-Operated Gate

1.10.1 Basic Principle

This regulator functions in similar fashion to the cylinder-operated gate (1.11) except that the gate is operated directly by a motor rather than a pneumatic or hydraulic cylinder.

1.10.2 Application

The motor-operated gate can be used for any volume of flow where automatic or remote control of the diverted flow is desired. Its use is not generally considered economically feasible for design flows of less than 4 cfs. Electric power must be available for operation of the motor. The motor is mounted on a floor stand directly above the gate.

If the sewer is deep enough the motor can be housed in an underground chamber; otherwise the motor will require housing above the ground. The latter alternative is preferable in any case since corrosion is less in an above-grade site. If an underground chamber is used, dehumidification and heating equipment may be provided or special equipment may be provided to handle these difficult conditions.

1.11 Cylinder-Operated Gate

1.11.1 Basic Principle

The chief element of this regulator is a cylinder-operated gate and orifice through which the intercepted flow passes to the treatment facility. The gate is operated by a hydraulic or pneumatic cylinder which responds to the sewage level as measured by a sensing device located either upstream or downstream of the gate. Operation of the cylinder may be by water, oil or air pressure. The sensor usually is either a float or compressed-air bubbler tube. The gate also may be operated by remote control which overrides the sensing device.

The regulator consists of an overflow dam constructed across the channel of the combined sewer so as to divert maximum dry-weather flow through a sluice gate into a regulator chamber. From this chamber the flow is conveyed by a branch interceptor to the main interceptor which leads to the treatment plant. Excess flows during storm periods will overflow the dam and continue in the combined sewer to the receiving waters.

1.11.2 Application

The cylinder-operated gate is suitable for flows over 4 cfs where automatic regulation of the diverted flow is desired. While this type can be used on smaller flows, it is not generally considered economical.

The water-cylinder type can be used where a water supply is available which will produce a minimum cylinder pressure of 25 psi. Because of the low cylinder pressure the size of sluice gate is generally limited to 9 to 12 square feet. Multiple gates are used where the opening exceeds 9 to 12 square feet. The hazard of cross-connections between the cylinder system and the public water supply must be considered. This is an important design requirement.

The oil-cylinder type requires an electric power source to operate the oil pump and the air compressor. To protect this equipment from the effects of the sewer atmosphere a separate chamber must be constructed to house the electrical equipment. Oil pressure of about 750 psi is preferred. The gate is not restricted as to size, as in the case of the water-cylinder type.

The air-cylinder type also requires a source of electric power to operate the air compressor. Air pressures of 90 to 200 psi have been used.

In jurisdictions that have tried both types, the oil-cylinder is preferred. The principal advantage of the oil-cylinder or air-cylinder type is that the flow can be monitored and regulated from a remote point thus making full use of the interceptor system, and its storage capacity, while protecting downstream treatment facilities and reducing the frequency and volume of overflows.

In general, cylinder-operated gates are considered an effective type of regulator currently in use in North America.

1.12 Current Developments—New Devices

1.12.1 General

This subsection includes regulators of recent design on which experimental work has been done and which, in some cases, have been installed for actual use.

1.12.2 Fluidics

Fluidics is defined as "the use of devices that have no moving parts, and that use a fluid medium for control of other devices, or that directly achieve an objective such as logic, computation or amplification". (Engineer, Jan.-Feb., 1969).

Fluidic devices of two general types have applicability, depending on the type of fluid-flow interaction that takes place within them. These categories are: (1) wall attachment, and (2) vortex amplifier.

Wall attachment devices form the largest group of fluidic components. In these devices, a high-velocity jet of fluid, emitted between two walls, attaches itself to one of them, attracted there by an area of lower pressure next to the wall caused by air entrainment.

The jet remains stable in this position unless it is disturbed by a pressure pulse or by continuous pressure from a central port. The basic configuration is shown in Figure 1.12.2.1.

The vortex amplifier consists of a cylindrical chamber as shown in Figure 1.12.2.2, an axially oriented outlet, a radially located supply inlet and a tangentially directed control inlet. When the flow is not being controlled, the inflow proceeds directly through the chamber to the outlet. When the flow is controlled, the momentum exchange between the inflow and control flow establishes a resultant spiral flow path to the outlet. This centripetal acceleration can provide significant impedance to the flow and the variation is essentially proportional to the control flow in maximum/minimum ratios up to ten. The device, therefore, operates in analog fashion. This produces quantity control and, as explained in 1.12.3, the secondary velocities imparted in simple spiral motion may induce solids separation in the flow. This offers opportunity for the control of the quality of overflow wastes.

Figure 1.12.2.3 shows a schematic arrangement for a fluidic regulator. The combined sewer splits into two branches. The first, or branch interceptor, conveys the flow to the treatment plant and the second, the storm sewer, conveys additional flow to receiving waters. In dry-weather periods a low dam in the storm sewer diverts all the flow to the branch interceptor and thence to the treatment plant. In wet-weather periods the portion of the flow diverted to each branch can be regulated by the amount of air pressure or vacuum supplied to slots A and B. These slots extend the full height of the sewer. The air pressure or vacuum is self-induced by the flow in the sewer by the use of various pneumatec devices.

Flow in excess of design cannot be passed through the regulator device. Excess flow can be passed over the unit into the overflow channel.

1.12.3 Vortices

The vortex regulator (in England called a vortex overflow or rotary vortex overflow) consists of a circular channel in which rotary motion of the sewage is induced by the kinetic energy of the sewage entering the tank. Flow to the treatment plant is deflected and discharges through a pipe at the bottom and near the center of the channel. Excess flow in storm periods discharges over a circular weir around the center of the tank and is conveyed to receiving waters. It is claimed that the rotary motion causes the sewage to follow a long path through the channel. In this period secondary innovational flow patterns are established, setting up an interface between the fluid sludge mass and the clearer liquid. In effect, it is claimed the device acts as a quality separator. The flow containing the concentration of solids is directed to the interceptor.

Research has been carried out on hydraulic models and two full-sized regulators of this type have been built in Bristol, England, (Reference 1). Details of these two regulators are shown in Figure 1.12.3. Design factors for these regulators are as follows:

	Whiteladies Road	Alma Road
Regulator diameter (ft)	18	18
Overflow diameter (ft)	9	9
Av. dry-weather flow (cfs)	0.18	0.92
Wet-weather flow diverted to plant (cfs)	2.58	5.84
Ratio WWF:DWF—design	14	6
Storm flow—once a year (cfs)	44.0	54.7
Size inlet (ft)	3	4 x 3

The ratio of wet-weather flow to dry-weather flow of 6:1 used in the Alma Road regulator conforms with British practice. In the Whiteladies Road regulator, provision was made for reducing the ratio if it becomes necessary.

During dry-weather periods sewage enters the chamber and flows into the branch interceptor near the center. In storm periods excess sewage discharges over the center weir and flows out the storm sewer. The baffle and weir crest configurations prevent floating material from flowing over the weir.

The depth of the chamber from the weir level to the invert is dependent on the available head, since the plant outlet is operating under a hydraulic grade from the weir level to the point where the sewer flows free. The storm sewer outlet must pass under the chamber and, if necessary, the entrance to the pipe can be surcharged. The design of the overflow weir follows accepted hydraulic practice and its level will normally be set so that at maximum design flow the inlet sewer is full.

Model studies at Bristol using synthetic sewage solids indicated a higher removal of solids in the flow to the bottom of the regulator than in the flow over the weir. Pilot studies are now underway at Bristol using a vortex regulator as a primary clarifier for raw sewage.

However, another series of experiments elsewhere on a model vortex regulator using raw sewage indicated poor performance in removing screenable solids. Under certain conditions the concentration of screenings in the sewage over the weir was greater than in the sewage passing to the bottom of the regulator (Reference 2).

FIGURE 1.12.2.1

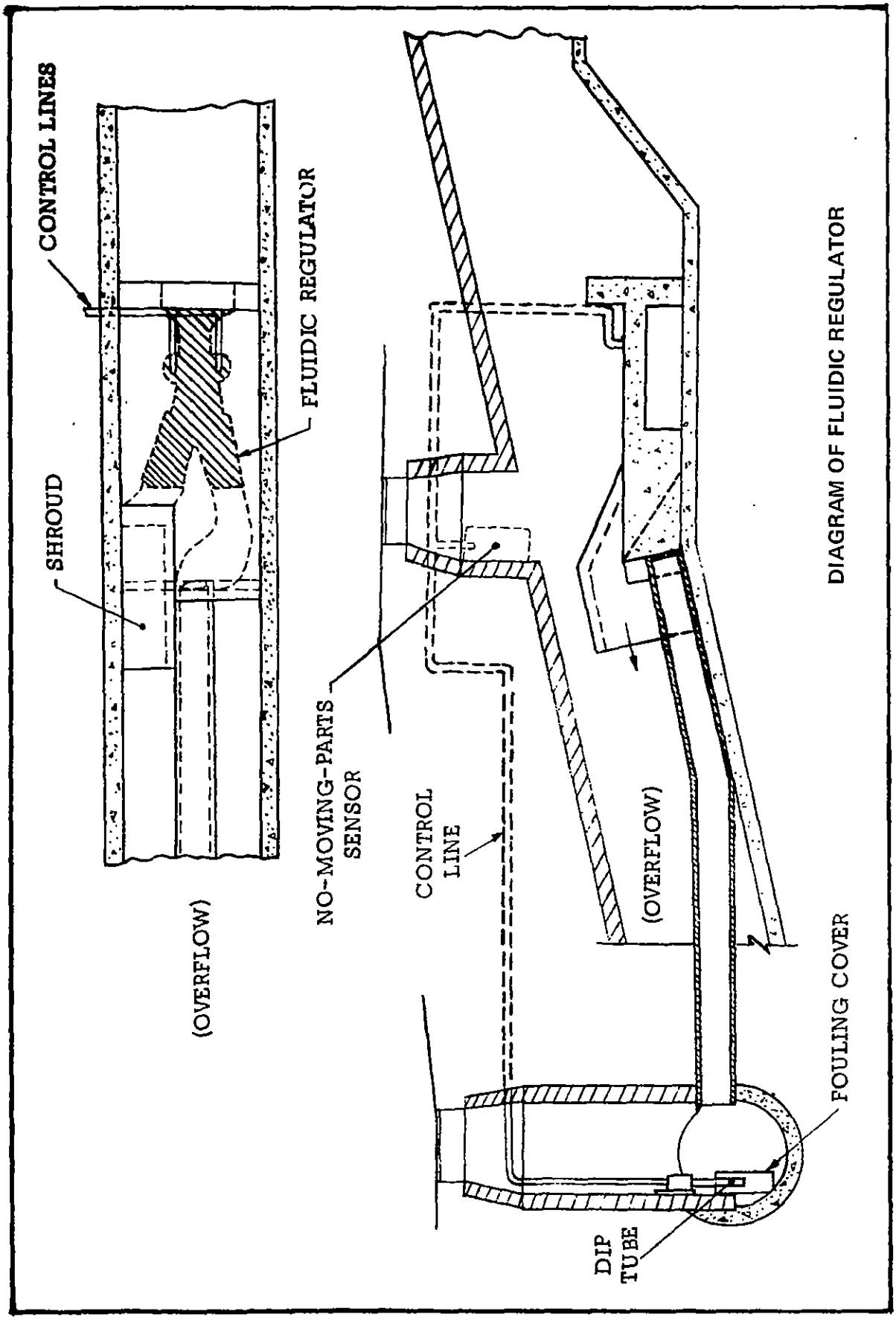

Courtesy Bowles Fluidic Corp.

FIGURE 1.12.2.2

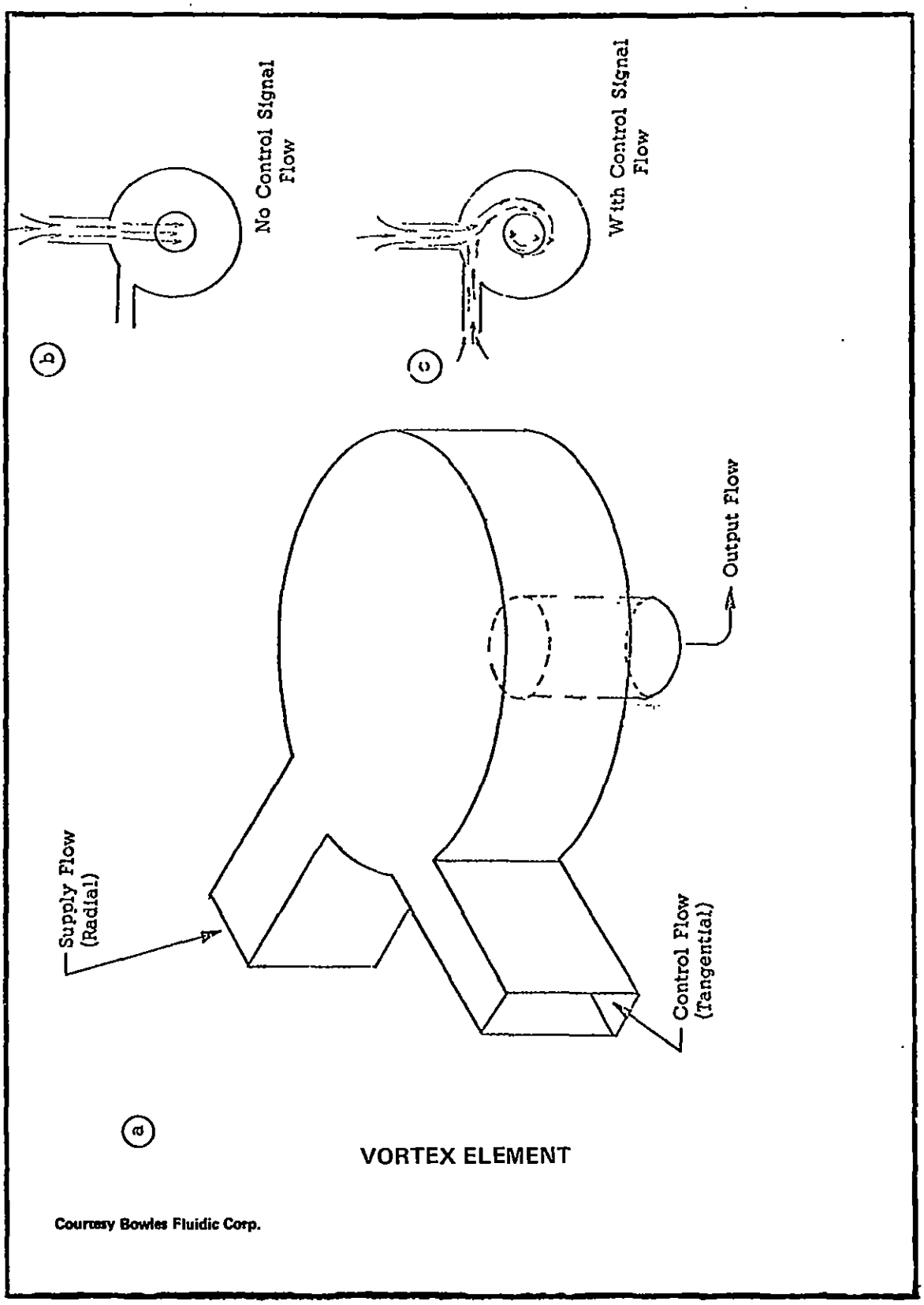

VORTEX ELEMENT

Courtesy Bowles Fluidic Corp.

FIGURE 1.12.2.3

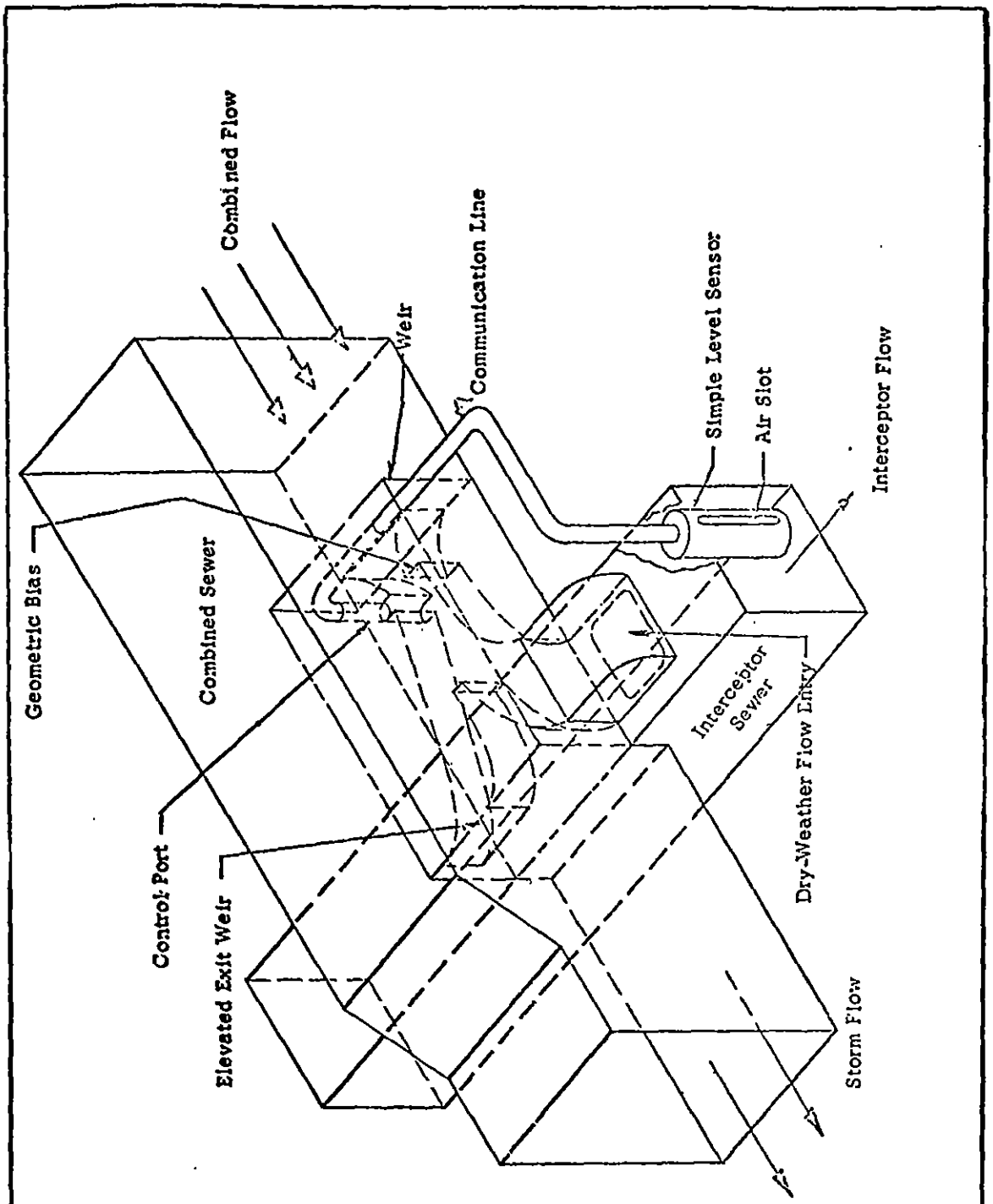

SCHEMATIC ARRANGEMENT – FLUIDIC INTERCEPTOR
SEWER FLOW CONTROL – SINGLE SENSOR

Courtesy Bowles Fluidic Corp.

FIGURE 1.12.3

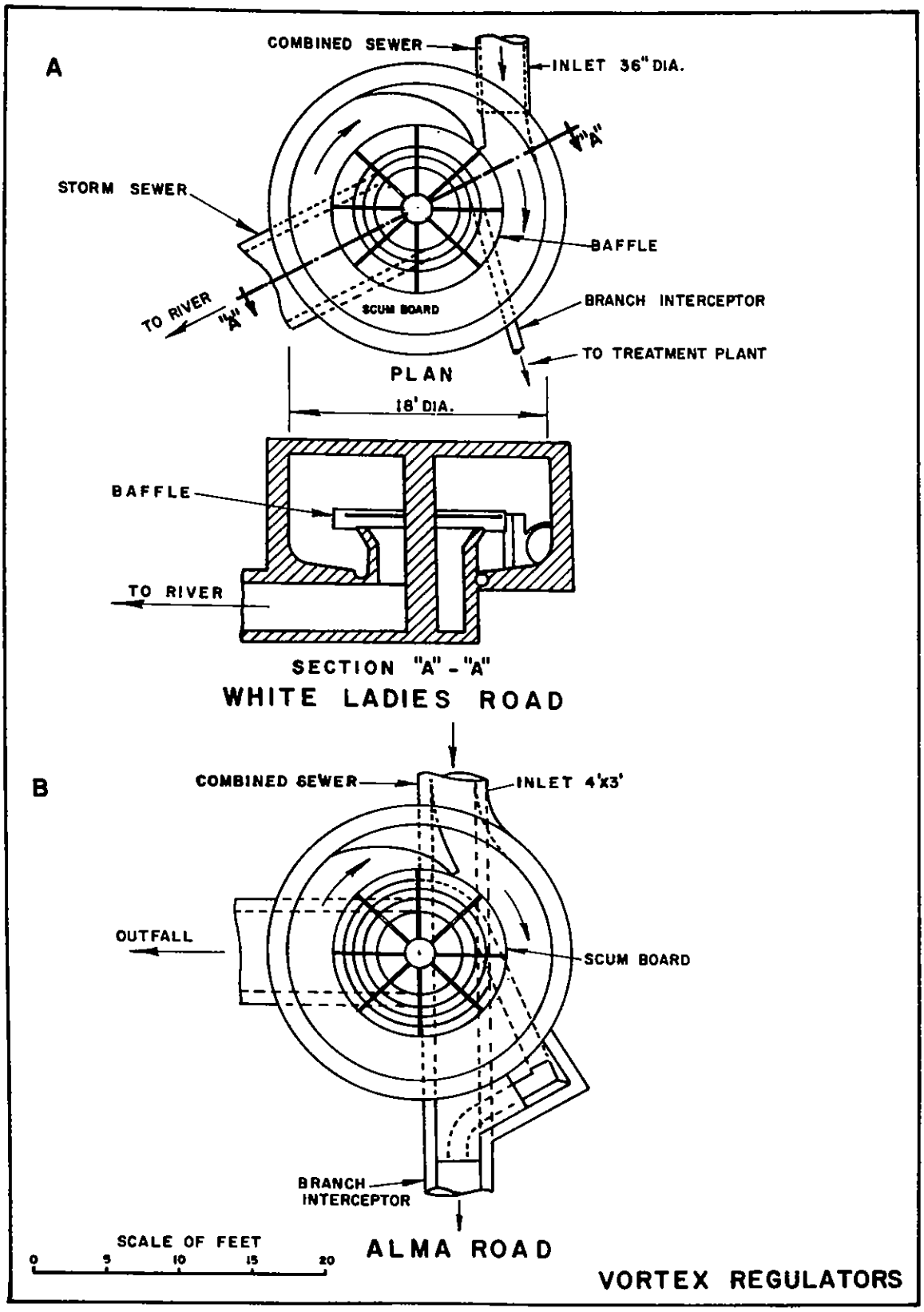

Courtesy Institution of Civil Engineers

1.12.4 Spiral Flow Separators

The spiral-flow regulator (in England the proposed name for the device is "storm sewage spiral-flow separator") is based on the concept of using secondary helical motions which exist in the bends of conduits, to establish a boundary layer between concentrated solids-bearing flow and clearer liquid, thus effectively separating the more heavily polluted mass for discharge to the interceptor.

Basically, in a bend of a conduit the direction of flow paths is not circumferential but follows a helical or spiral pattern. At the bend the more concentrated liquid mixture is nearer to the bed of the channel and tends to concentrate along the inner wall of the bend and the clearer liquid mixture tends to flow out towards the outer wall. With an overflow positioned along the outer wall of the bend it is possible to draw off the less polluted effluent. A bend with a total angle between 60 and 90 degrees is employed.

Model studies of this device were carried out at the University of Surrey, England (Reference 3). These investigations are by no means complete but they indicate that it is feasible, by one short bend or a series of short bends, to separate the heavily polluted sewage from the clearer overflowing liquid.

The simplest form of regulator suggested by the model studies is shown in Figure 1.12.4. A short bend of approximately 60 degrees is used as a separator. The heavily polluted sewage is drawn to the inner wall. It then passes to a semi-circular channel situated at a lower level leading to the treatment plant. The proportion of the drawn-off discharge will depend on the particular design. The side weir, with properly designed baffles, starts 10 to 15 degrees from the beginning of the bend at the outer wall. Its length will depend on the design, but it could become a double weir downstream of the end of the bend, i.e., after the heavily polluted sewage is decanted or drawn off. Surface debris collects at the end of the chamber and passes over a short flume to join the sewer conveying the flow to the treatment plant.

The authors of the model study report that even the simplest application of the spiral-flow separator will produce a cheap regulator which will be superior to many existing types. They also stated that further research is necessary in order to define the variables, the limits of applications, and the actual limitations of the spiral-flow regulator.

The principal advantage of this device is that two relatively flat, reverse curves, produce effective helical motion which may provide quality separation characteristics. This application may be economically significant in existing space-limited combined sewer interceptor junction locations.

1.12.5 Stilling Ponds

The stilling pond regulator as used in England comprises a short length of widened channel which acts as a stilling basin, from the bottom of which the flow to the plant is discharged. The flow to the plant is controlled either by use of an orifice on the outlet in the chamber or by use of a "throttle pipe," – i.e., an outlet pipe designed so that it will be surcharged in wet-weather periods. Its discharge will depend on the sewage level in the regulator. Excess flows during storms discharge over a transverse weir and are conveyed to the river. The use of the stilling pond provides time for the solids to settle out when the first flush of storm water arrives at the regulator before discharge over the weir begins. In England it is generally assumed that the first flush will carry the greatest concentration of solids. This first flush concept is not universally accepted in North America.

The performance of this regulator was investigated in England (Reference 2). The experimental structure is shown in Figure 1.12.5. The size of this structure was considered suitable for a domestic population of 2,000. Discharge to treatment was 0.9 cfs at first spill over the weir. At maximum inflow to the regulator of 7.4 cfs the flow to treatment was 1.06 cfs. Tests were made with no scum board and with a scum board set 6 and 18 inches from the weir. The best results were obtained with the scum board set 6 inches from the weir when the ratio of screenings in the overflow to the screenings in the flow to the plant was 0.69.

A possible application of this type regulator is shown in Figure 1.12.5 when it is desired to construct the chamber in an existing combined sewer.

This type regulator is considered suitable for overflows up to 30 cfs (Reference 4). If the stilling pond is to be successful in separating solids it is suggested that not less than a 3-minute retention be provided at the maximum rate of flow (Reference 4).

1.12.6 High Side-Spill Weirs

Unsatisfactory experience with side-spill weirs in England has led to the development of the high side-spill weir, referred to there as the high double side-weir overflow. The weirs are made shorter and higher than would be required for the normal side-spill weir. The rate of flow to treatment may be controlled by use of a throttle pipe or a mechanical gate controlled by a float.

The performance of this type of regulator was investigated in England (Reference 2). The experimental structure is shown in Figure 1.12.6. The structure was sized for a population of roughly 2,000. Discharge to treatment was 0.94 cfs at first discharge over weir and this discharge increased to 1.12 cfs

FIGURE 1.12.4

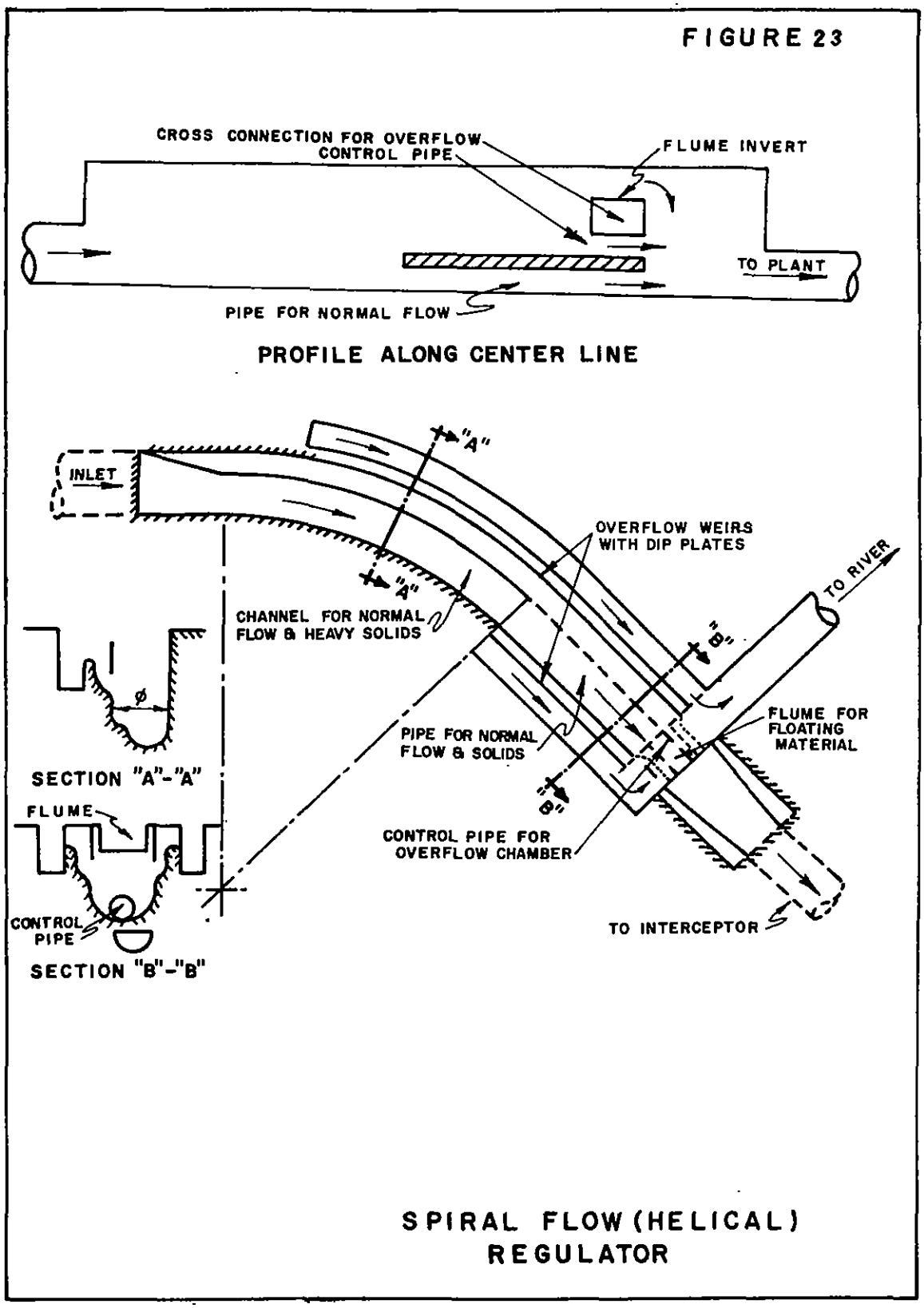

Courtesy Institution of Civil Engineers

FIGURE 1.12.5

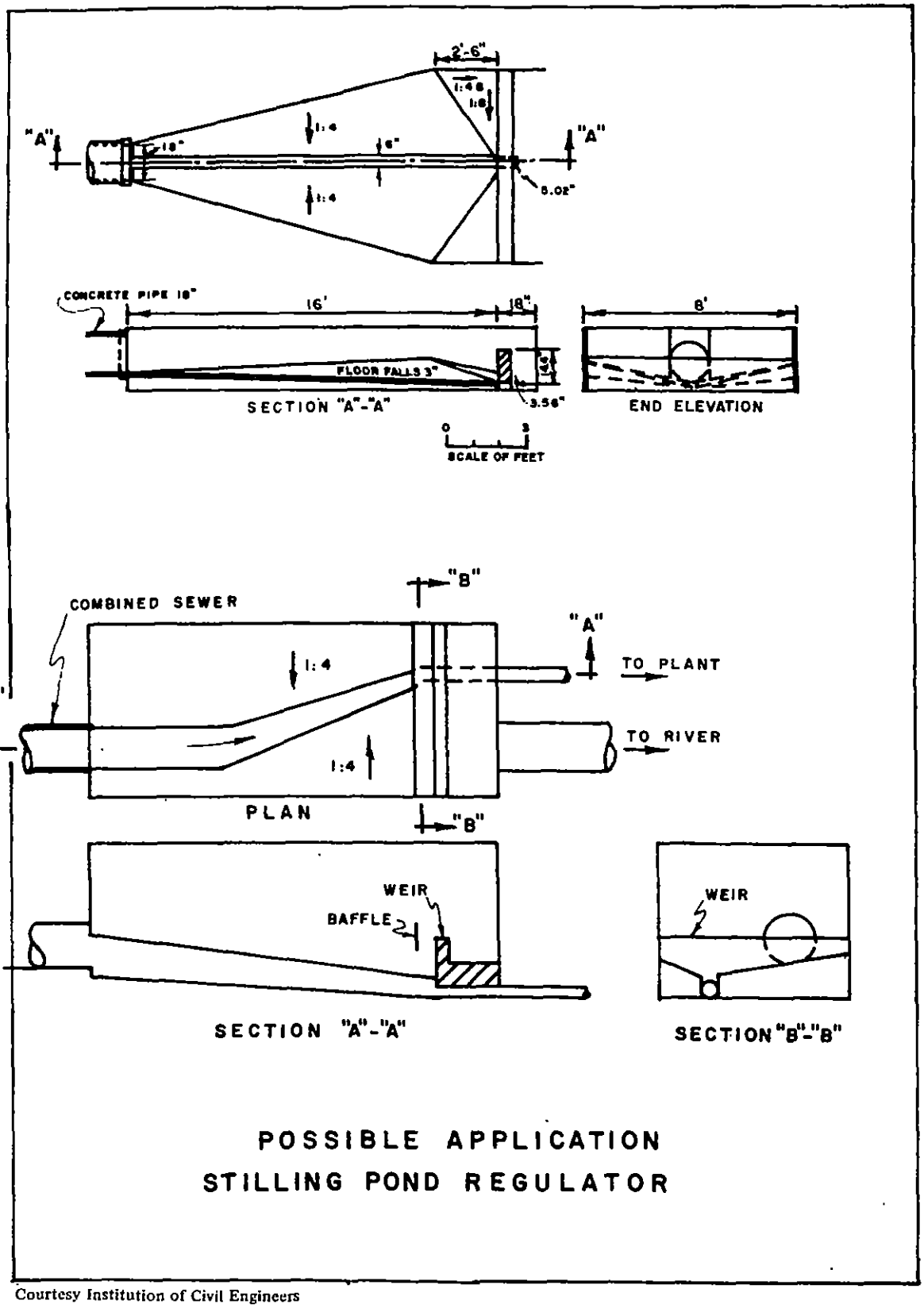

Courtesy Institution of Civil Engineers

FIGURE 1.12.6

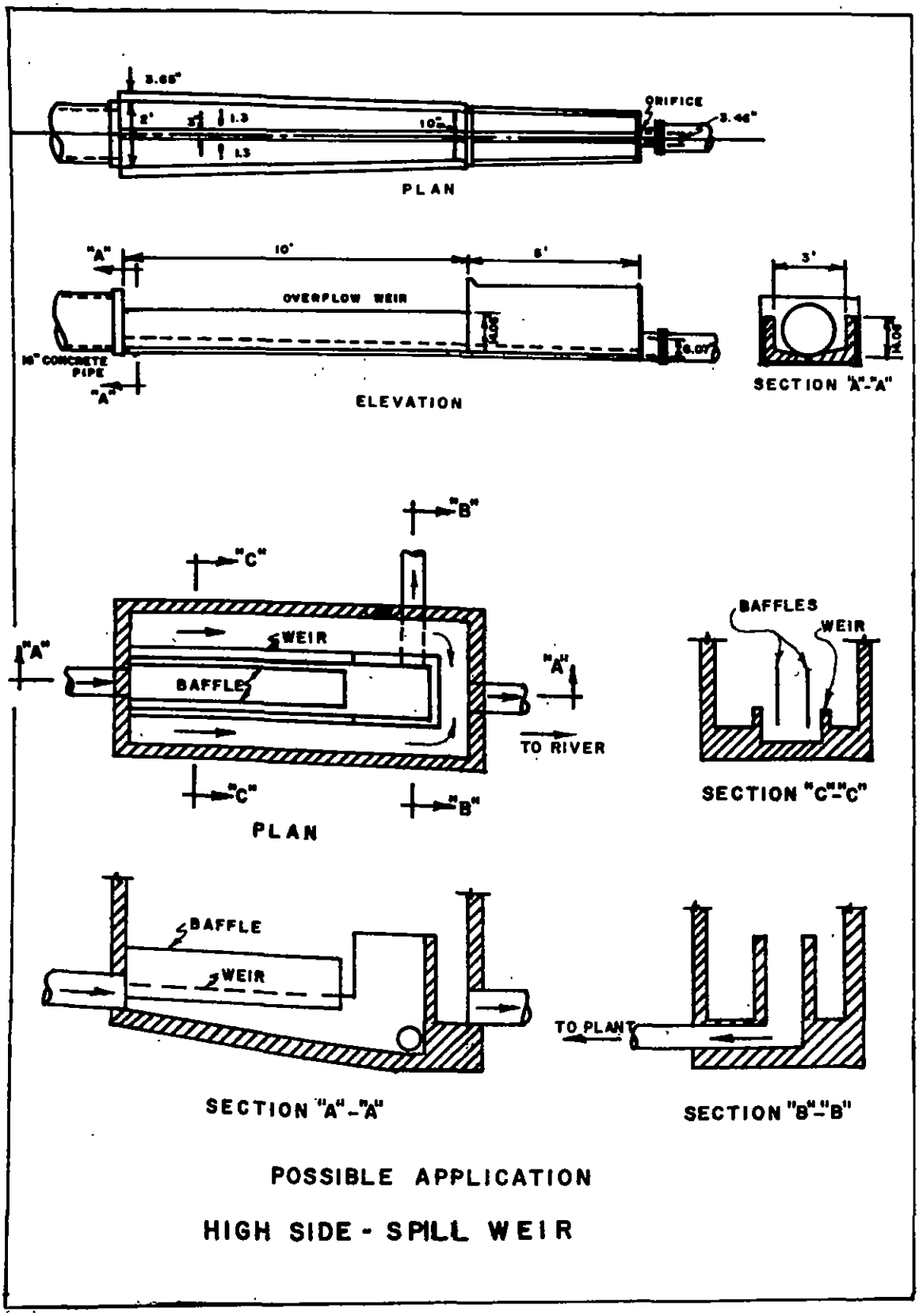

Courtesy Institute of Civil Engineers

when total inflow to the regulator was 7.0 cfs. The orifice on the pipe to the interceptor was 6 inches wide by 3 1/2 inches high. The ratio of screenings in the overflow to screenings in the flow to treatment was 0.5, the lowest of the four types tested. This device has the best general performance when compared to the stilling pond, the vortex and the low side-overflow weir.

1.12.7 Broadcrested Inflatable Fabric Dams

The broadcrested inflatable fabric dam is a variably-controlled gating structure manufactured from reinforced rubberized fabric. This reinforced fabric is shaped into a sealed tube, capable of being pressurized with either water, air or a combination of air and water. Each inflatable dam is adapted to and designed to be readily installed and operated on irregular, flat or curved foundation surfaces without affecting the inflatable dam's design discharge characteristics and capabilities. The inflatable dam is installed in a deflated state and therefore assumes the shape and contour of the foundation surfaces. Flow in the combined sewer can be regulated and sewage or storm flow can be diverted to the interceptor by the operation of the inflatable dam. Flow through the interceptor to the treatment plant can also be controlled by inflatable dams or by some other gating device if flow control can be regulated.

Overflow can be regulated by simply increasing the elevation of the inflatable dam by either automatic, semi-automatic or manually operated controls. Only when the capacity of the interceptor has been reached and the level of the admixture of sewage and storm water reaches the storage capacity of the combined sewer system will overflow be allowed to occur. The inflatable dam is a fail-safe gating structure which will not allow clogging and jamming during peak storm periods. The inflatable dam can be controlled so that hydraulic pressure provided by the upstream water level in the sewer conduit will activate a positive deflation mechanism, allowing excess effluent to run off. Then when flows subside and overflow pressures are reduced, the inflation control valves open and the inflatable dam re-inflates until the designed pressure and dam height is reestablished.

Crest control for inflatable dams used to regulate flows in a waterway is based on the relative head between upstream water level and dam inflation pressure. When water is used as the inflation medium, an inverted "U" tube siphon pipe installed in the drain line provides a fail-safe and positive deflation mechanism. The height of the siphon apex is adjustable so that flexibility in settings is possible and deflation can correspond, as desired, to various upstream water levels and flow rates. An air vent is connected to the top of the siphon. With the valve closed, the siphon will prime whenever dam inflation pressure, as increased by rising upstream water level, exceeds the siphon height setting, and continuous complete deflation then takes place. With the apex valve open, the siphon acts as a standpipe and dam deflation will be partial and intermittent, depending upon the rates at which flows build up and subside. Positive deflation control is thus assured under high flow conditions, whether the air valve is open or closed. The siphon serves a secondary purpose in preventing over-inflation during the filling operations.

As flows subside, overflow pressure reduces, the inflation float valve opens, and the dam gradually re-inflates until ultimately the upstream pool returns to normal level and the dam is again at nominal inflated height.

Air-inflated dams operate under the same fail-safe principle as water-inflated dams except that air-actuated instrumentation and controls excite the deflation cycle system. The decision as to whether to use water, air, or a combination of air and water as the best inflation medium for inflatable dams depends upon operating requirements. The best crest control is achieved with water inflation. The use of air, however, usually results in less cost for fabric and control equipment, especially when inflation-deflation cycle time limits must be quite rapid. In addition, air inflation is dictated whenever a dam must remain fully operational during freezing winter conditions.

Figure 1.12.7 is an artist's conception of a regulator facility utilizing the inflatable fabric dam.

1.12.8 References

All references listed below are from the Symposium on Storm Sewage Overflows, May 4, 1967, sponsored by the Institution of Civil Engineers.

1. Smisson, B., "Design, Construction and Performance of Vortex Overflows".
2. Ackers, P. et al., "Storm Overflow Performance Studies Using Crude Sewage".
3. Prus-Chacinski, T. M. et al., "Secondary Motion Applied to Storm Sewage Overflows".
4. Oakley, H. R., "Practical Design of Storm Sewage Overflows".

FIGURE 1.12.7

ARTISTS CONCEPTION – INFLATABLE FABRIC DAM

Courtesy Firestone Coated Fabrics, Co.

SECTION 2

DESIGN GUIDELINES FOR REGULATORS, THEIR CHAMBERS AND CONTROL FACILITIES

CONTENTS

Page

STATIC REGULATORS

2.1 Manually Operated Gates 21
2.2 Fixed Orifices (Vertical) 29
2.3 Fixed Orifices (Horizontal) "The Drop Inlet" 30
2.4 Leaping Weirs 35
2.5 Side-Spill Weirs 36
2.6 Internal Self-Priming Siphons 40

DYNAMIC REGULATORS–SEMI-AUTOMATIC

2.7 Float-Operated Gates 41
2.8 Tipping Gates 51
2.9 Cylindrical Gates 62

DYNAMIC REGULATORS–AUTOMATIC

2.10 Cylinder-Operated Gates 62
2.11 Motor-Operated Gates 73
2.12 External Self-Priming Siphons 73

STATIC REGULATORS

2.1 Manually Operated Gates

2.1.1 Description

The regulator may consist of three chambers: (1) A diversion chamber, (2) orifice chamber, and (3) tide-gate chamber. The last chamber may be omitted when a tide gate is not required. A typical regulator is shown in Figure 2.1.1.

The diversion chamber contains a dam to deflect the dry weather flow at right angles to the sewer axis into the orifice chamber. The diversion dam is usually set at a maximum height of six inches above the invert of the combined sewer to minimize backwater effects upstream in the combined sewer during storm flows. The diversion channel invert is set so that peak DWF can be diverted without overflowing the dam. Excess storm flow will pass over the dam into the flap-gate chamber and continue to the receiving waters.

The gate is set in the orifice chamber on the common wall between the two chambers. The opening is manually adjustable. The minimum dimension of the opening should be four inches to reduce clogging tendencies.

The gate usually consists of a square sluice gate or circular shear gate. The use of the gate has these advantages: (1) The size opening can be adjusted, (2) the gate can be readily opened to clear it of debris; and (3) the gate can be readily closed to stop all flow to the orifice chamber when maintenance is required.

A square or rectangular sluice gate is preferable to a circular one. When a circular gate is partially closed the opening is crescent shaped. This form of opening is more subject to clogging than a square or rectangular opening because material may become wedged in the acute angles at the ends of the crescent.

There is some difference of opinion among designers as to whether the diversion chamber should be constructed with or without a channel. If the channel is used the DWF is conveyed into the orifice with little or no reduction of velocity and there will be no deposition of material in the diversion chamber between storms. If the diversion dam is only six inches above the invert of the combined sewer it will cause little impediment to large solids or floating material during storm flows even if the face of the dam is vertical. Other designers prefer to omit the channel and provide a flat slope on the face of the diversion dam so that storm flows will readily sweep any deposition on the invert up and over the dam. However, during low DWF the pool upstream of the dam will act as a stilling basin and cause grit and solids to accumulate in the diversion chamber. Odors may then become a problem. Since the purpose of the regulator is to convey all sanitary flow including grit and solids to the treatment plant it would appear that the use of the channel is preferable.

2.1.2 Design Guidelines

A typical layout for this device is shown in Figure 2.1.1. For design, obtain all pertinent data for combined sewer at the proposed location of the regulator including, diameter, invert elevation, slope, average and peak DWF and peak storm flow. The regulator design flow is considered herein to be the peak DWF. Obtain similar data for the interceptor at the proposed junction with branch interceptor. If the interceptor is being designed in conjunction with the regulator assume the elevation for interceptor and adjust as found necessary by subsequent computations.

The gate may be either square, rectangular or circular. The design computations which follow are based on the use of a rectangular orifice. Discharge through the orifice is proportional to the square root of the head on the orifice. Hence a four-fold increase in the head will result in a two-fold increase in the discharge. During low flow periods, discharge will be determined on the basis of critical depth through the orifice, providing the water surface downstream of the orifice is lower. As the depth of flow increases and rises above the top of the orifice, discharge will be based on the difference between the heads on the two sides of the orifice. The orifice chamber and branch interceptor must be designed so that there will be no backwater in the orifice chamber to affect the discharge from the orifice at design flow. The branch interceptor should be designed to carry the peak dry-weather sanitary flow. As the diverted flow exceeds the peak DWF the hydraulic gradient of the branch interceptor will increase, thus raising the water surface in the orifice chamber downstream of the orifice. The resultant submergence of the orifice will reduce the head on the orifice and this will decrease the discharge through it during storm periods.

Thus, the quantity of storm flow diverted to the interceptor is affected by two factors: (1) The effect of the increased depth of flow in the combined sewer on discharge through the orifice is lessened because the discharge is proportional to the square root of the head on the orifice; and (2) the increase in intercepted flow may exceed the capacity at normal

FIGURE 2.1.1

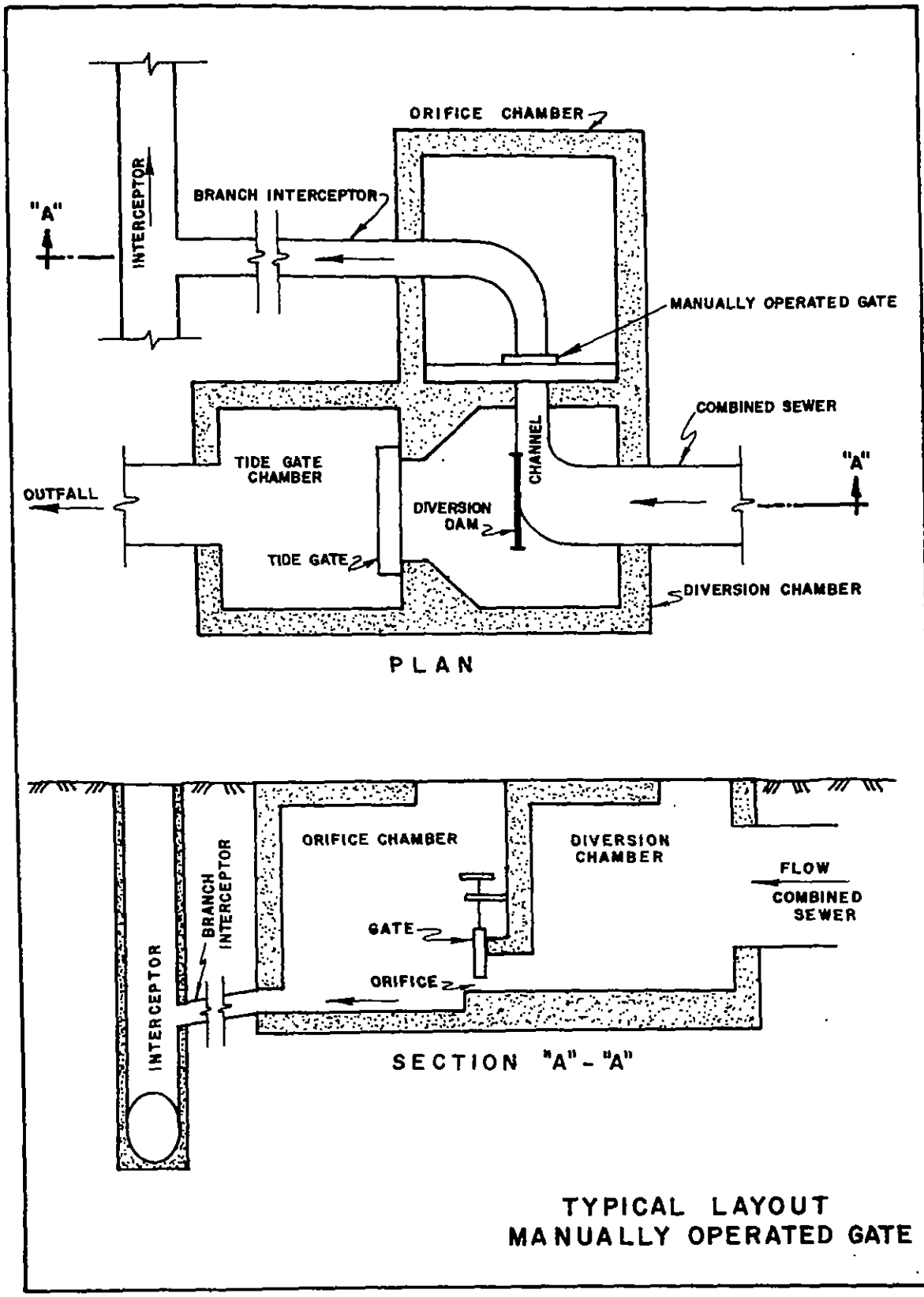
ORIFICE CHAMBER
INTERCEPTOR
BRANCH INTERCEPTOR
"A"
MANUALLY OPERATED GATE
COMBINED SEWER
CHANNEL
TIDE GATE CHAMBER
OUTFALL
DIVERSION DAM
TIDE GATE
DIVERSION CHAMBER
PLAN
ORIFICE CHAMBER
DIVERSION CHAMBER
FLOW
COMBINED SEWER
BRANCH INTERCEPTOR
GATE
ORIFICE
INTERCEPTOR
SECTION "A" - "A"
TYPICAL LAYOUT
MANUALLY OPERATED GATE

flow depths of the branch interceptor, thus raising the hydraulic grade line in the orifice chamber and reducing the effective head on the orifice. The second factor becomes more pronounced as the branch interceptor length is increased. It is, accordingly, desirable to locate the regulator some distance from the interceptor—at least 100 feet. Further, to not cause backwater from the branch interceptor in the orifice chamber it is desirable that the flow in the branch be subcritical at design flow.

If field conditions are such that the branch interceptor cannot be designed to meet the foregoing criteria it may be necessary to provide some flow control device in the orifice chamber. This could be a vertical stop log control, as used for the cylinder-operated gate, or an orifice either in the channel or on the outlet pipe from the orifice chamber.

The hydraulic gradient and energy lines for peak DWF should be computed starting with the water surface at the interceptor and proceeding upstream along the branch interceptor to the orifice chamber. The elevation of the control dam in the diversion chamber is usually set 0.5 feet maximum above invert of the combined sewer. The size of the orifice should be selected and the required head to pass the design discharge should be determined. The invert of the orifice should be set at the required elevation and water surface downstream of orifice in orifice chamber should be determined. The water surface should be compared with required hydraulic grade for the branch interceptor. Elevations of the latter and the size of the orifice must be adjusted as required.

The quantity diverted to the interceptor during storm periods is determined by the trial and error method.

In the initial computation, the hydraulic computations should start at the water surface in the interceptor at peak DWF. In subsequent trials it may be necessary to raise the branch interceptor at its junction with the main interceptor which will result in flow at critical depth at the end of the branch interceptor. In this case it may be necessary to compute the backwater curve for the flow in the branch interceptor to determine the depth of flow at the upstream end.

Sample computations are given in paragraph 2.1.3 of this manual.

2.1.3 Sample Computation
Manually Operated Gate

Pertinent data

A = Cross Sectional area in sq. ft.
D = Diameter
V = Velocity
d = Depth of flow
Q = Quantity of discharge
b = Width of opening
H_m = Minimum specific energy
HGL = Hydraulic grade line
d_c = Critical depth of flow
g = Acceleration of gravity
C = Coefficient
W. S. = Water surface elevation

Interceptor

D = 36", Invert el. = 10.0, W.S. = 12.4

Combined Sewer

D = 54 ", Invert el. = 16.00, s = 0.0026

Manning n = 0.013, V (full) = 6.4 fps

Flow	Q cfs	d ft.	V fps	W.S. el.
DWF = Dry-weather flow - av	0.5	0.3	1.8	16.3
Dry-weather - peak	2.0	0.5	2.5	16.5
1-year storm	60.0(1)	2.5	6.7	18.5
10-year storm	100.0(1)	3.6	7.2	19.6

(1) includes peak dry-weather flow

Distance from interceptor to regulator = 100'
HGL = hydraulic grade line
EL = energy line

2.1.3 Manually Operated Gate

Design Q = 2.0 cfs	ELEVATION Invert	HGL	EL
See figure 2.1.3.1			
Interceptor - peak dry-weather flow	10.0	12.40	
Determine lowest profile of branch interceptor			
Branch interceptor			
L = 100′ n = 0.013 Q = 2cfs D = 10′ S = 0.008 V (full) = 3.7 fps d/D = 0.8 V = 1.14 x 3.7 – 4.2 fps $V^2/2g$ = 0.27			
Lowest possible invert			
12.40 – 0.8 (0.83)	11.74	12.40	
Pipe outlet loss 1.0 (0.27 – 0) = 0.27			12.67
Friction head 100 x 0.008 = 0.8			

Branch Interceptor	ELEVATION Invert	HGL	EL
Upstream end	12.54	13.20	13.47
At orifice chamber			.14
Pipe inlet loss 0.5 (.27) = 0.14			13.61
Assume complete loss of velocity in orifice discharge. Water surface in orifice chamber same as EL.		13.61	

Diversion Chamber

Dam = 16.00 + 0.50 = 16.50 — 16.50

Try 12″ x 12″ sluice gate
Determine invert elevation

$Q = 3.09\ b\ H_m^{3/2}$
$2.0 = 3.09 \times 1 \times H_m^{3/2}$
$H_m = 0.75$
$d_c = 2/3\ 0.75 = 0.50$
$V_c = \frac{Q}{b\ dc} = \frac{2.0}{1x0.5} = 4.0$ fps
$d = H_m + 0.5\ \frac{V_c^2}{2g}$
$= 0.75 + 0.5\ \frac{16}{64.4}$
$d = 0.88^1$

Check – From Fig. 2.1.3.2 $d = 0.88^1$

FIGURE 2.1.3.1

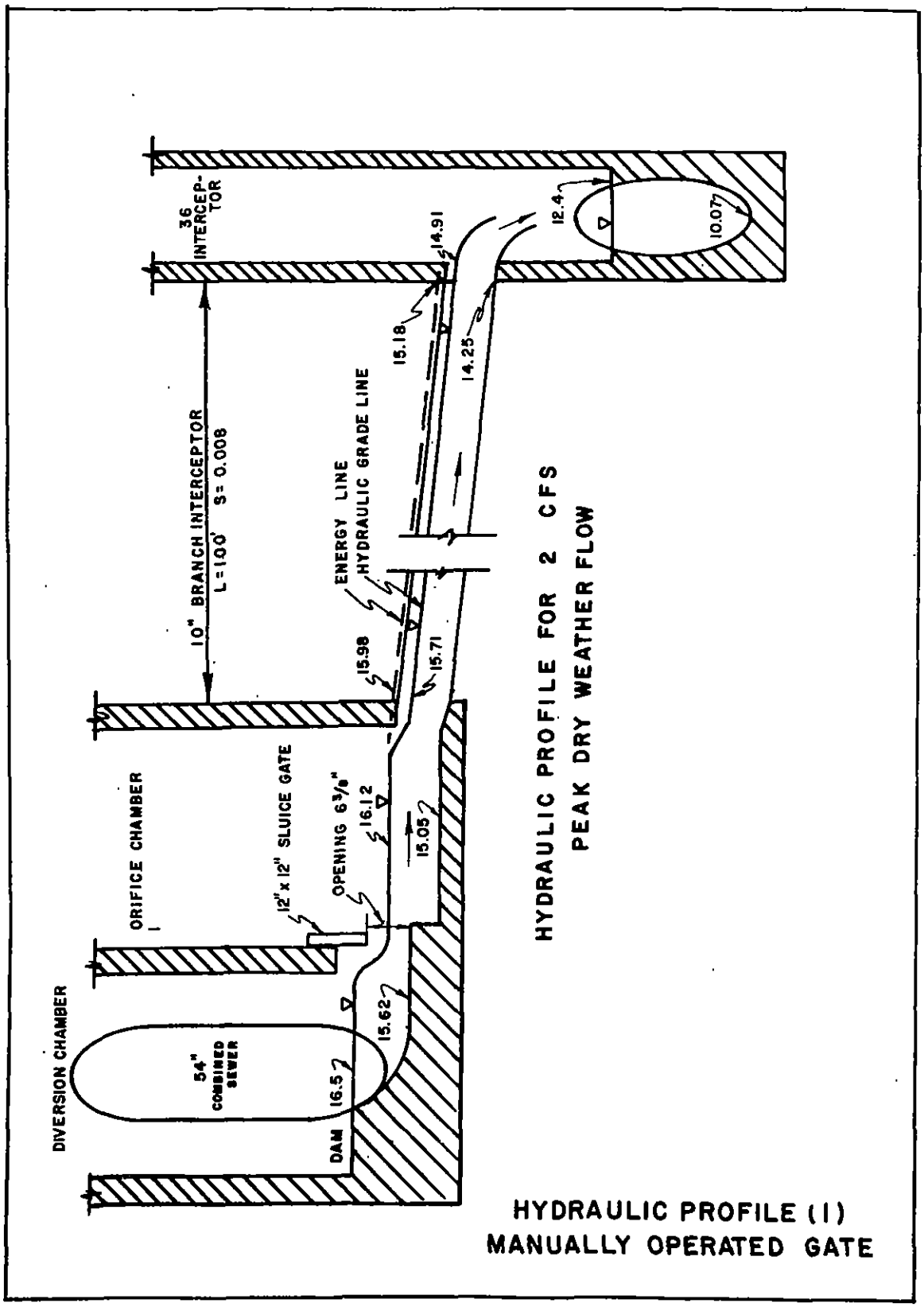
36 INTERCEP-TOR
12.4
10.07
14.91
15.18
14.25
10" BRANCH INTERCEPTOR L=100' S=0.008
ENERGY LINE HYDRAULIC GRADE LINE
15.98
15.71
ORIFICE CHAMBER 1
12"x12" SLUICE GATE
OPENING 6 3/8"
16.12
15.05
DIVERSION CHAMBER
54" COMBINED SEWER
15.62
16.5
DAM
HYDRAULIC PROFILE FOR 2 CFS PEAK DRY WEATHER FLOW
HYDRAULIC PROFILE (1) MANUALLY OPERATED GATE

FIGURE 2.1.3.2

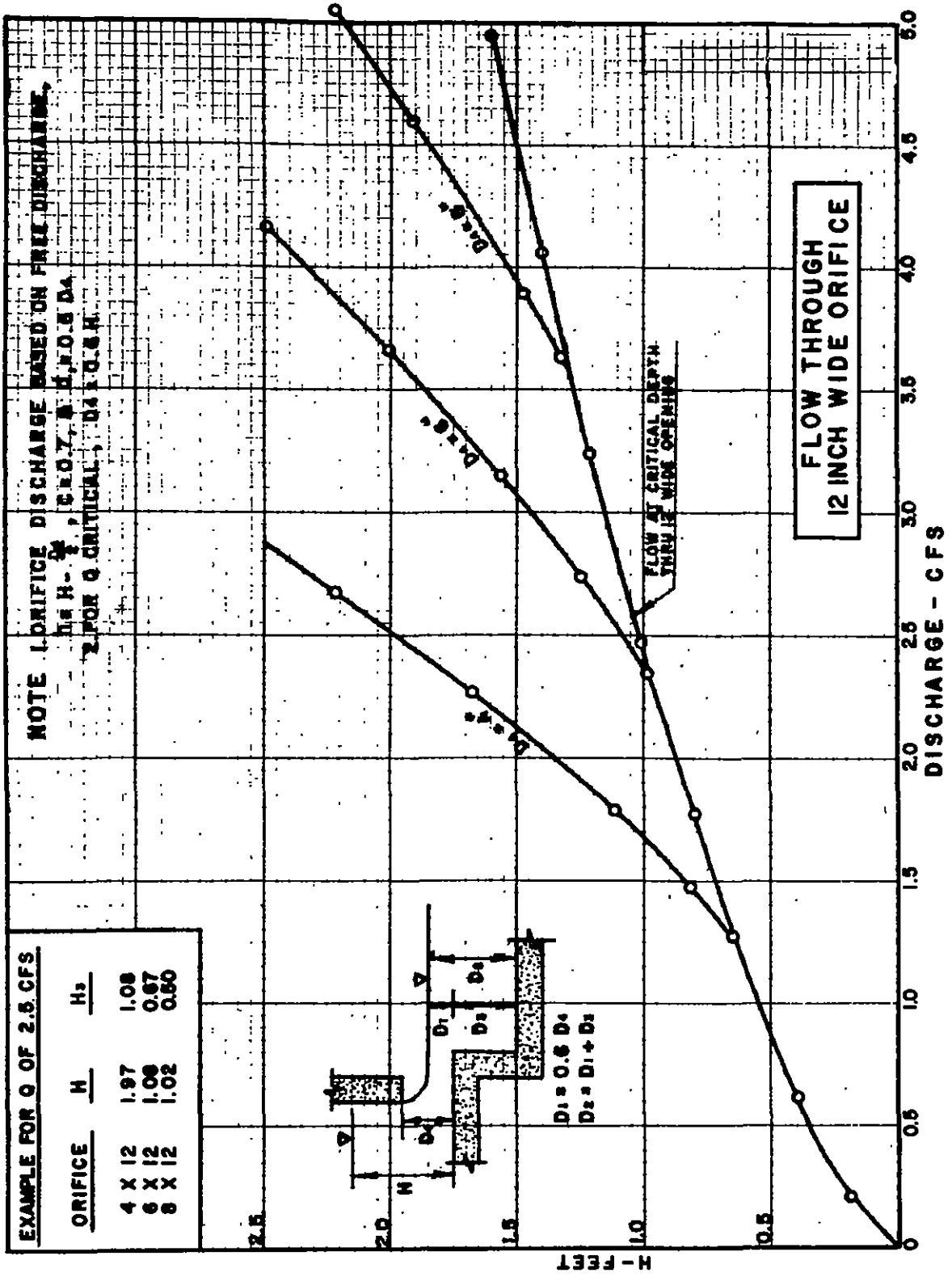
FLOW THROUGH
12 INCH WIDE ORIFICE
DISCHARGE - CFS
H - FEET
FLOW AT CRITICAL DEPTH THRU 12" WIDE OPENING
EXAMPLE FOR Q OF 2.5 CFS
ORIFICE H Hs
4 X 12 1.97 1.08
6 X 12 1.06 0.67
8 X 12 1.02 0.60
D1 = 0.6 D4
D2 = D1 + D3

2.1.3 Manually Operated Gate

	ELEVATION		
	Invert	HGL	EL
Set invert of orifice at 0.88[1] below flow line			
16.50 – 0.88 =	15.62		
Orifice Chamber			
Orifice			
Invert	15.62		
HGL = 15.62 + d_c = 15.62 + 0.50		16.12	
Assume Velocity head loss			16.12
∴ Branch interceptor can be raised until HGL at upper end is 16.12			

Rise = 16.12 – 13.61 = 2.51

	ELEVATION		
Orifice Chamber	Invert	HGL	EL
Revised branch interceptor—Highest profile			
1./ Downstream 11.74 + 2.51	14.25		
14.25 + (.8) (0.83) = 14.25 + 66		14.91	
Outlet loss $V^2/2g$ = 0.27			15.18
Friction loss 100 x 0.008 = 0.80			
Upstream end	15.05	15.71	15.98
Pipe inlet loss 0.5 x 0.27 = 0.14			16.12
Required water surface		16.12	
2./ Invert of orifice chamber	15.05		

Notes:

1./ Critical depth will occur at downstream end of branch interceptor. However computation of backwater curve indicates normal flow depth will occur 10 feet upstream from outlet. Therefore the computations to determine upstream conditions can ignore critical depth.

2./ This is maximum elevation for invert at chamber and will result in greatest submergence of orifice when diverted flows exceed 2.0 cfs. The invert and branch interceptor can be set lower but this will decrease submergence of orifice at higher flows and will result in greater diversions.

FIGURE 2.1.3.3

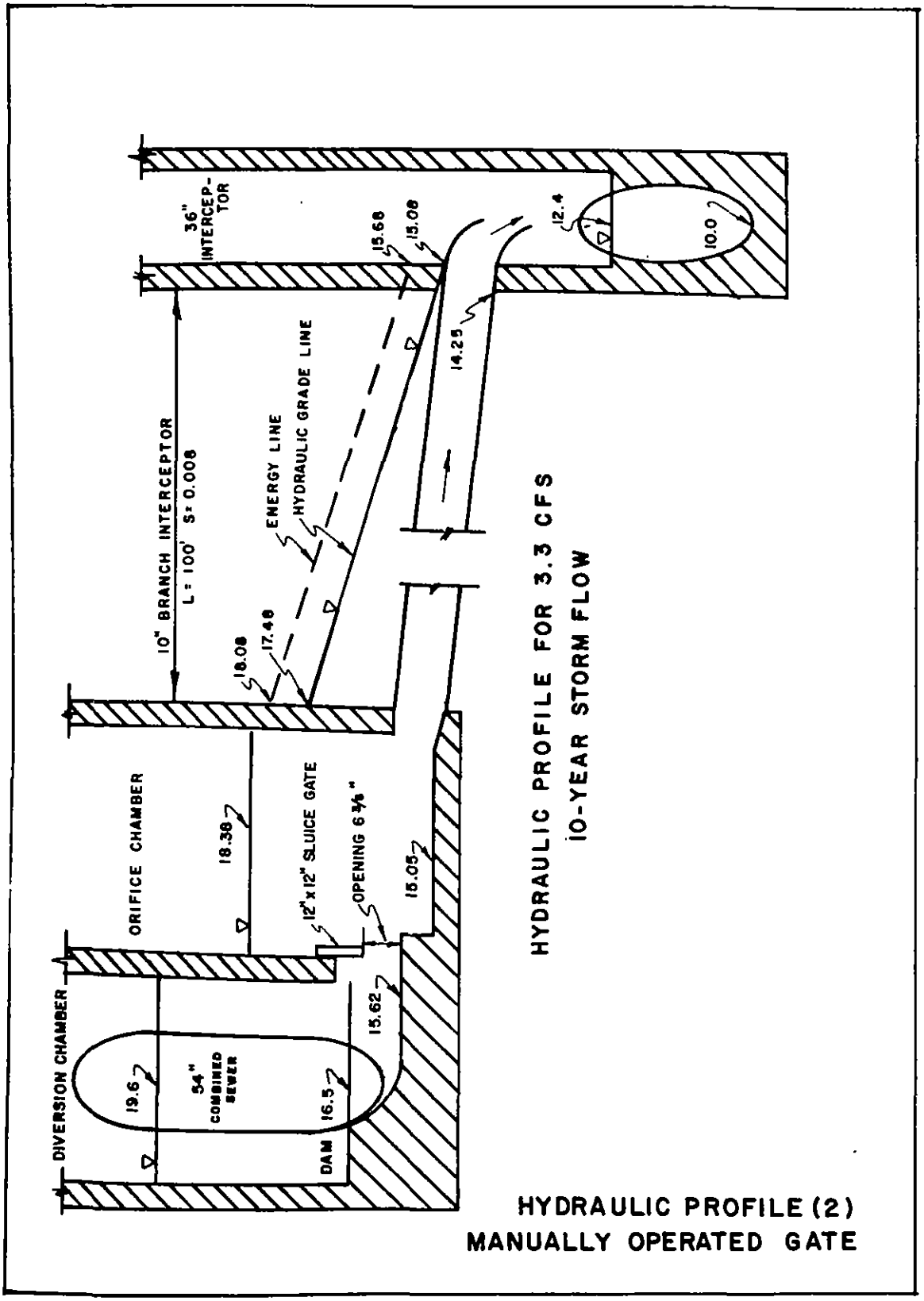
36" INTERCEPTOR
15.68
15.08
12.4
10.0
14.25
ENERGY LINE
HYDRAULIC GRADE LINE
10" BRANCH INTERCEPTOR
L = 100' S = 0.008
18.08
17.48
ORIFICE CHAMBER
18.38
12"x12" SLUICE GATE
OPENING 6 ⅛"
15.05
15.62
DIVERSION CHAMBER
19.6
54" COMBINED SEWER
16.5
DAM
HYDRAULIC PROFILE FOR 3.3 CFS
10-YEAR STORM FLOW
HYDRAULIC PROFILE (2)
MANUALLY OPERATED GATE

2.1.3 Manually Operated Gate

Determine flow diverted to branch interceptor in wet weather periods by trial and error

	10-year storm	1-year storm
HGL in combined sewer	19.60	18.50
Q diverted cfs-assume	3.4	2.9
V-fps	6.24	5.3
10" branch S for EL	0.024	0.018
Top branch lower end 1/	15.08	15.08
Exit loss $V^2/2g$	0.60	0.44
Friction loss 100 x S	2.40	1.80
Ent. loss $0.5\ V^2/2g$	0.30	0.22
HGL in orifice chamber	18.38	17.54
Total head (H) on orifice 19.6 – 18.19	1.22	0.96
$Q = 2.81\sqrt{H}$	3.3	2.9
Diverted Q cfs	3.3	2.9

Ratio $\frac{WWF}{DWF} = \frac{WWF}{0.5}$

1./ Critical depth is 0.78'. Backwater computation indicates pipe will be flowing full 2 feet from end. Assume pipe is flowing full at end.

$$Q = CA\sqrt{2gH} = 0.7 \times 1.0 \times 0.53 \times 8.03\sqrt{H} = 2.98\sqrt{H}$$

2.2 Fixed Orifices (Vertical)

2.2.1 Description

The regulator is similar in all respects to the manually operated gate except that no gate is used.

2.2.2. Design Guidelines

The design guidelines for the vertical orifice are the same as those established for the manually operated gate in 2.1. In the description of the latter device it is stated that if the flow in the branch interceptor is not subcritical it may be necessary to install a control in the orifice chamber to cause submergence of the orifice chamber to cause submergence of the orifice and thus reduce the amount intercepted during storm periods. To accomplish this purpose the Allegheny County Sanitary Authority has installed a "double-orifice regulator" which uses a rectangular orifice between the combined sewer and orifice chamber and a circular orifice on the outlet from the orifice chamber. The branch interceptor is designed with sufficient slope so that the outlet orifice functions with free discharge. Sample computations for a single

fixed vertical orifice would be similar to those presented in 2.1.3 for a manually operated gate.

2.3 Fixed Orifices (Horizontal) (The Drop Inlet)

2.3.1 Description

When the horizontal orifice is located in the invert of the combined sewer it may consist of an open slot or an inlet with a metal grating. After droping through the slot or grating the flow is conveyed by the branch interceptor to the interceptor. A dam is required immediately downstream of the orifice to prevent overflows during dry weather periods.

When the horizontal orifice is located in a separate chamber the regulator consists of a diversion chamber, orifice chamber and, when necessary, a tide gate chamber.

The diversion chamber is similar to that used for manually operated gates. The opening in the common wall between the diversion chamber and the orifice chamber should be made large enough so as not to act as a control orifice during dry-weather peak flows. The invert of the diversion chamber can be provided with a channel or a flat bottom.

Dry-weather flow in the combined sewer is diverted by the dam in the diversion chamber into the orifice chamber through an opening in the common wall between the diversion and orifice chambers. The orifice is set horizontally in the bottom of the orifice chamber at sufficient depth below the diversion dam to intercept the design flow. The flow passing through the orifice drops into the branch interceptor which conveys the flow to the interceptor. The orifice may be either circular or rectangular. If circular, provision should be made for replacing the orifice plate, when necessary, to change the size of the orifice. If rectangular, the orifice can be made by using two fixed plates and two removable plates so that the size of the opening can be revised. Stop planks should be provided in the diversion chamber to prevent flow to the orifice chamber when adjustments are made to the orifice.

2.3.2 Design Guidelines

The area of grate to provide for an orifice located in the sewer invert can be determined from the orifice formula, using the head on the grate caused by the dam. It is difficult to decide what allowance should be made for clogging. A reasonable assumption is that 50 percent of the grate opening area is available for flow. Hence, if a storm occurs when the grate is clean an excessive flow may be intercepted. On the other hand, the first rush of storm flow may carry so much debris that the grate becomes clogged very quickly. For the foregoing reasons it is considered preferable to place the horizontal orifice in a separate chamber.

During dry weather flow the hydraulic gradient at the upstream end of the branch interceptor should be below the orifice for proper functioning of the regulator. If the hydraulic grade line is just below the orifice during dry weather flows and the branch interceptor is designed for subcritical flow, then storm flows will cause the hydraulic grade line to rise above the orifice and the flow into the branch interceptor will be governed by the hydraulics of the branch interceptor rather than by the orifice. Since this will reduce the amount intercepted during wet weather periods it is desirable to make the branch interceptor of some length, say at least 100 feet, so as to develop such a backwater effect. It should also be noted that during storm flows the vertical opening between the diversion and orifice chambers will act as an orifice. The height of the opening is usually made large enough so that the vertical opening will have little effect on the size of the flow diverted to the interceptor. The height of this opening could be decreased to further decrease the diverted flow. This in effect, would be designing a double orifice regulator, with one orifice vertical and one horizontal.

2.3.3 Sample Computation
Horizontal Orifice

d = depth of flow
A = area
C = coefficient
L = length
g = gravity acceleration

Given

Interceptor Sewer
Dia. = 36", Invert el. = 10.0
Water surface = 12.4

2.3.3 Horizontal Orifice

Combined Sewer
Dia. = 54", Invert el. = 16.00, S = 0.0026
Manning n = 0.013
V (full) = 6.4 fps

Flow	Q	d	V	WS
	cfs.	ft.	fps	el.
Dry-weather-av	0.5	0.3	1.8	16.3
Dry-weather-peak	2.0	0.5	2.5	16.5
1-year storm	60.0	2.5	6.7	18.5
10-year storm	100.0	3.6	7.2	19.6

Distance from interceptor to regulator = 100 ft.
HGL = hydraulic grade line
EL = energy line

Design Q = 2.0 cfs
See Figure 2.3.3.1

	ELEVATION		
	Invert	HGL	EL
Interceptor	10.0	12.4	
Diversion Chamber			
Design flow in sewer = 16.5 cfs *Dam elev* = 16.5' = 0.5' above invert	16.0	16.5	16.5
Side Opening Say 2.0' wide Area = 2.0 x 0.5 = 1.0 sq. ft. V = 2.0 ÷ 1.0 = 2 fps Flow toward orifice chamber 90° bend loss $V^2/2g$ = 0.06		16.44	16.50
Orifice Chamber			
Assume loss of velocity head		16.44	16.44
Try 9" x 8" orifice $Q = CA\sqrt{2gH}$ $2.0 = (0.6)(0.5)(8.03)\sqrt{H}$ H = 0.83 ft. V = 2.0 ÷ 0.5 = 4 fps			
El. orifice = 16.44 - 0.83	15.61		

FIGURE 2.3.3.1

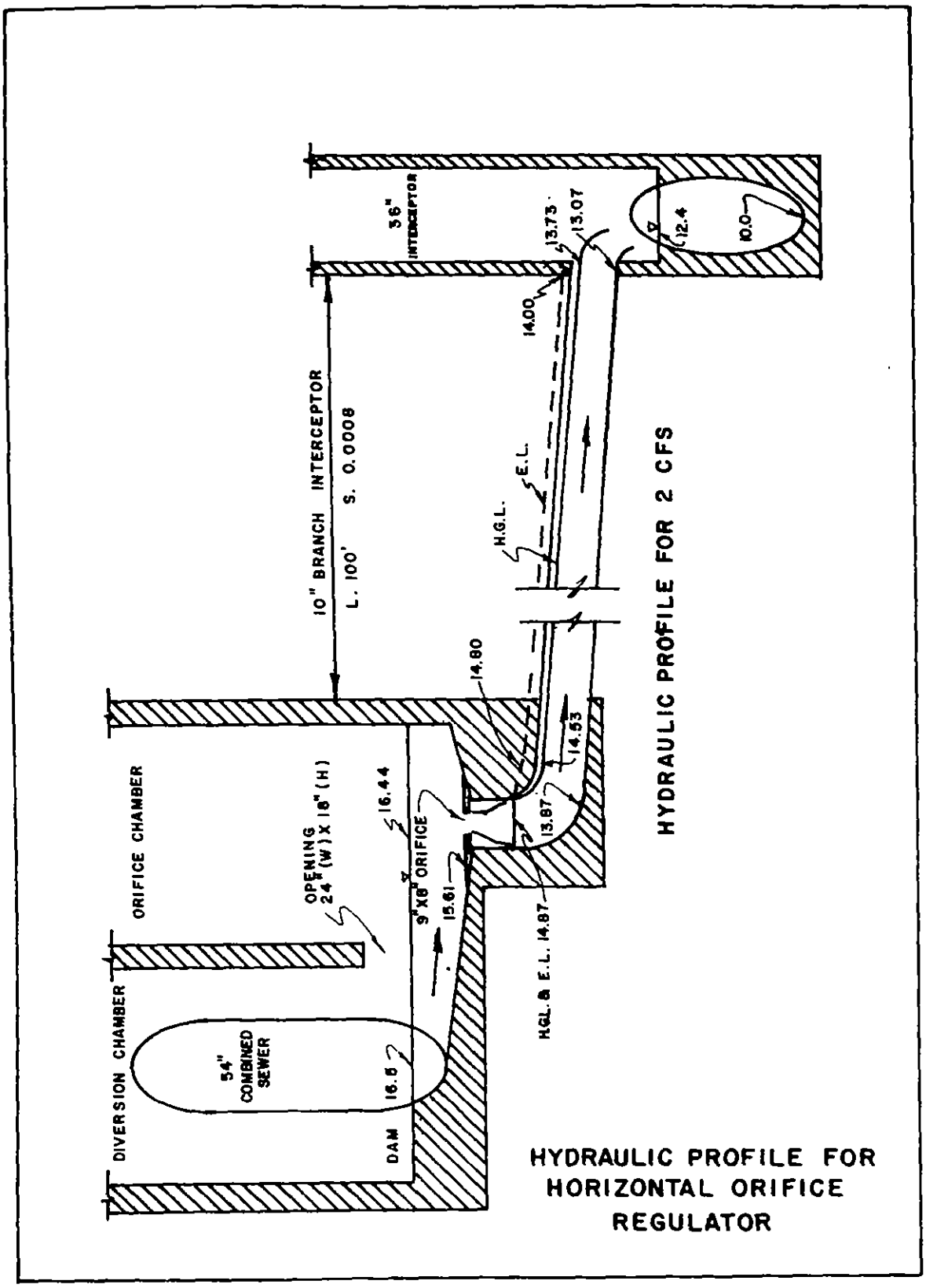

36" INTERCEPTOR
13.73
13.07
12.4
10.0
14.00
10" BRANCH INTERCEPTOR
L. 100' S. 0.0008
E.L.
H.G.L.
HYDRAULIC PROFILE FOR 2 CFS
14.80
14.53
13.87
16.44
OPENING 24" (W) X 18" (H)
9"X8" ORIFICE
15.61
H.G.L. & E.L. 14.87
ORIFICE CHAMBER
DIVERSION CHAMBER
54" COMBINED SEWER
16.5
DAM
HYDRAULIC PROFILE FOR HORIZONTAL ORIFICE REGULATOR

2.3.3 Horizontal Orifice

		ELEVATION		
		Invert	HGL	EL
Branch Interceptor				
L = 100′ n = 0.013 Q = 2 cfs				
D = 10″, S = 0.008 V = 3.7, $V^2/2g = 0.21$				
d/D = 0.8, V = 1.13 x 3.7 = 4.2 fps, $V^2/2g = 0.27$				
Downstream End			12.40	
12.40 – (0.8 x .83) = 12.40 – 0.66		11.74		
Exit loss $V^2/2g = 0.27$				12.61
Upstream End				
Friction loss 100 x 0.008 = 0.80		12.54	13.20	13.47
Bend loss 0.25 $V^2/2g$	0.07		13.27	13.54
Distance of HGL below orifice				
15.61 – 13.27 = 2.34				
Use 10″ C.I. ASA 21.10 90° bend				
Highest invert = 15.61 – 1.67	13.94			
From above inv. = 13.27 – 0.66	12.61			
Raise branch interceptor	1.33			

Note: Flow at critical depth will occur at downstream end.
Flow at normal depth will occur 10′ upstream.
Therefore, computation of upstream condition can ignore critical depth at lower end.

	ELEVATION		
Revise elevations of Branch Interceptor	Invert	HGL	EL
Downstream end			
11.74 + 1.33	13.07	13.73	14.00
Upstream end	0.80	0.80	0.80
	13.87	14.53	14.80
90° bend loss		0.07	0.07
Below orifice		14.87	14.87

Determine flow diverted in wet weather

FIGURE 2.3.3.2

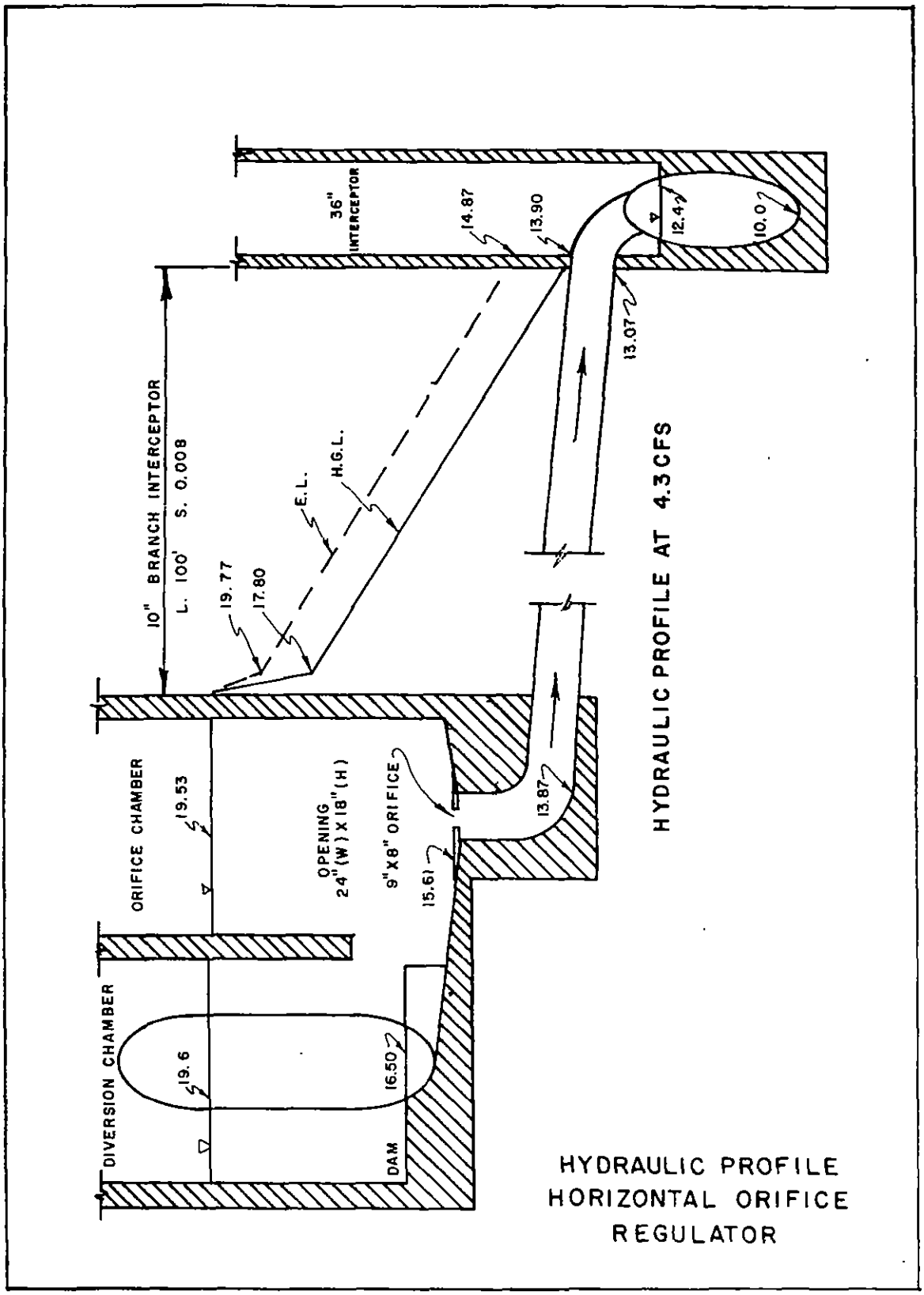
36" INTERCEPTOR
14.87
13.90
12.49
10.0
13.07
10" BRANCH INTERCEPTOR
L. 100' S. 0.008
E.L.
H.G.L.
19.77
17.80
ORIFICE CHAMBER
19.53
OPENING
24" (W) X 18" (H)
9" X 8" ORIFICE
15.61
13.87
DIVERSION CHAMBER
19.6
16.50
DAM
HYDRAULIC PROFILE AT 4.3 CFS
HYDRAULIC PROFILE
HORIZONTAL ORIFICE
REGULATOR